Installation and operation manual

VRV 5-S system air conditioner

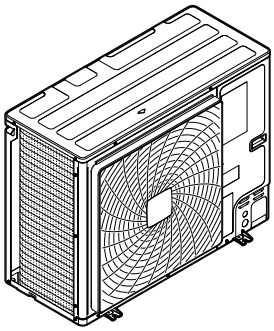

RXYSA4B▲V1B▼
RXYSA5B▲V1B▼
RXYSA6B▲V1B▼

RXYSA4B▲Y1B▼
RXYSA5B▲Y1B▼
RXYSA6B▲Y1B▼

▲= 1, 2, 3, …, 9, A, B, C, …, Z
▼= , , 1, 2, 3, …, 9

Installation and operation manual
VRV 5-S system air conditioner

English

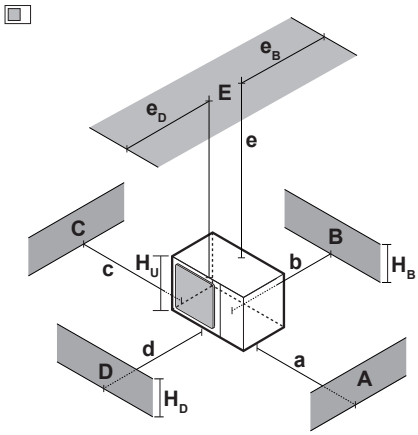

A~E	H_B H_D H_U		[mm] a	b	c	d	e	e_B	e_D	
B	—			≥100						
A, B, C	—		≥100(1)	≥100	≥100					
B, E	—			≥100			≥1000		≤500	
A, B, C, E	—		≥150(1)	≥150	≥150		≥1000		≤500	
D	—					≥500				
D, E	—					≥500	≥1000	≤500		
B, D	$H_D>H_U$			≥100		≥500				
	$H_D≤H_U$			≥100		≥500				
B, D, E	$H_D>H_U$	$H_B≤½H_U$		≥250		≥750	≥1000	≤500		1
		$½H_U<H_B≤H_U$		≥250		≥1000	≥1000	≤500		
		$H_B>H_U$	⊘							
	$H_D≤H_U$	$H_D≤½H_U$		≥100		≥1000	≥1000		≤500	
		$½H_U<H_D≤H_U$		≥200		≥1000	≥1000		≤500	
		$H_D>H_U$	⊘							

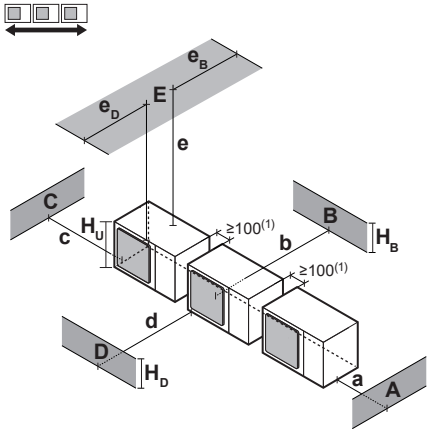

A, B, C	—		≥200(1)	≥300	≥1000					
A, B, C, E	—		≥200(1)	≥300	≥1000		≥1000		≤500	
D	—					≥1000				
D, E	—					≥1000	≥1000	≤500		
B, D	$H_D>H_U$			≥300		≥1000				
	$H_D≤H_U$	$H_D≤½H_U$		≥250		≥1500				
		$½H_U<H_D≤H_U$		≥300		≥1500				
B, D, E	$H_D>H_U$	$H_B≤½H_U$		≥300		≥1000	≥1000	≤500		1+2
		$½H_U<H_B≤H_U$		≥300		≥1250	≥1000	≤500		
		$H_B>H_U$	⊘							
	$H_D≤H_U$	$H_D≤½H_U$		≥250		≥1500	≥1000		≤500	
		$½H_U<H_D≤H_U$		≥300		≥1500	≥1000		≤500	
		$H_D>H_U$	⊘							

1

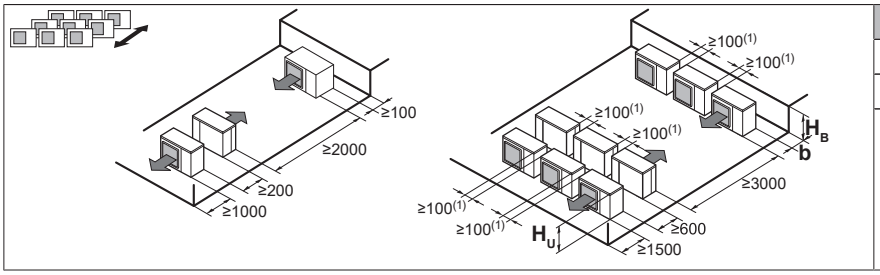

H_B H_U	b [mm]
$H_B≤½H_U$	b≥250
$½H_U<H_B≤H_U$	b≥300
$H_B>H_U$	⊘

2

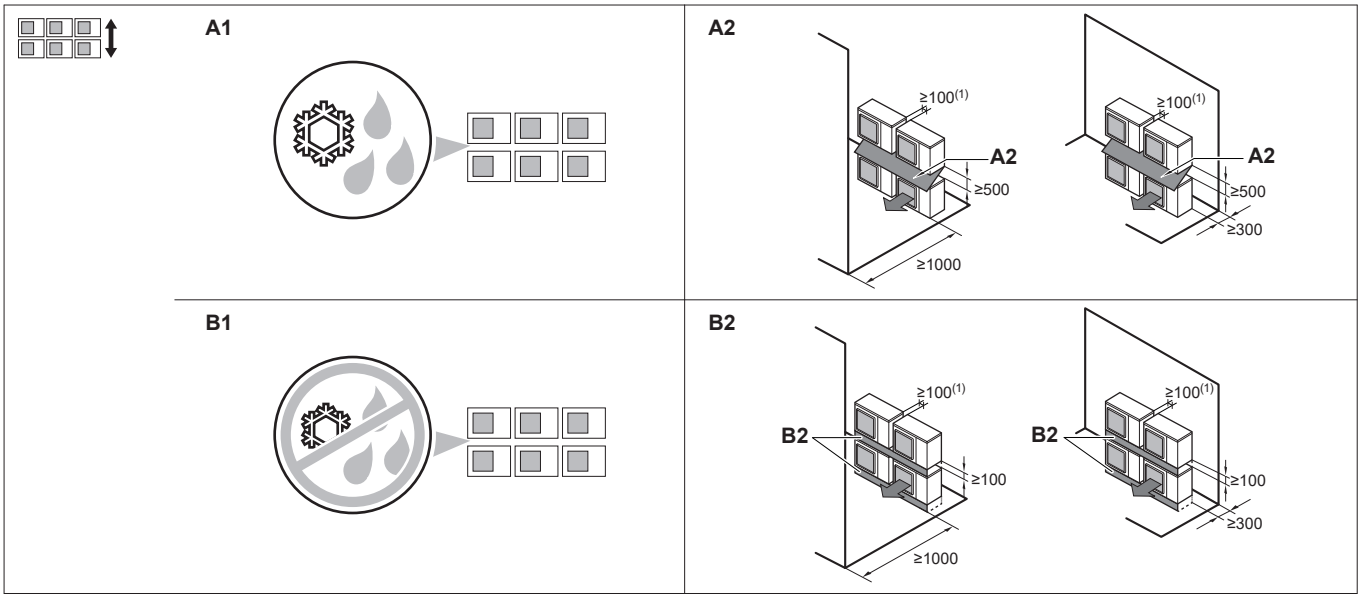

3

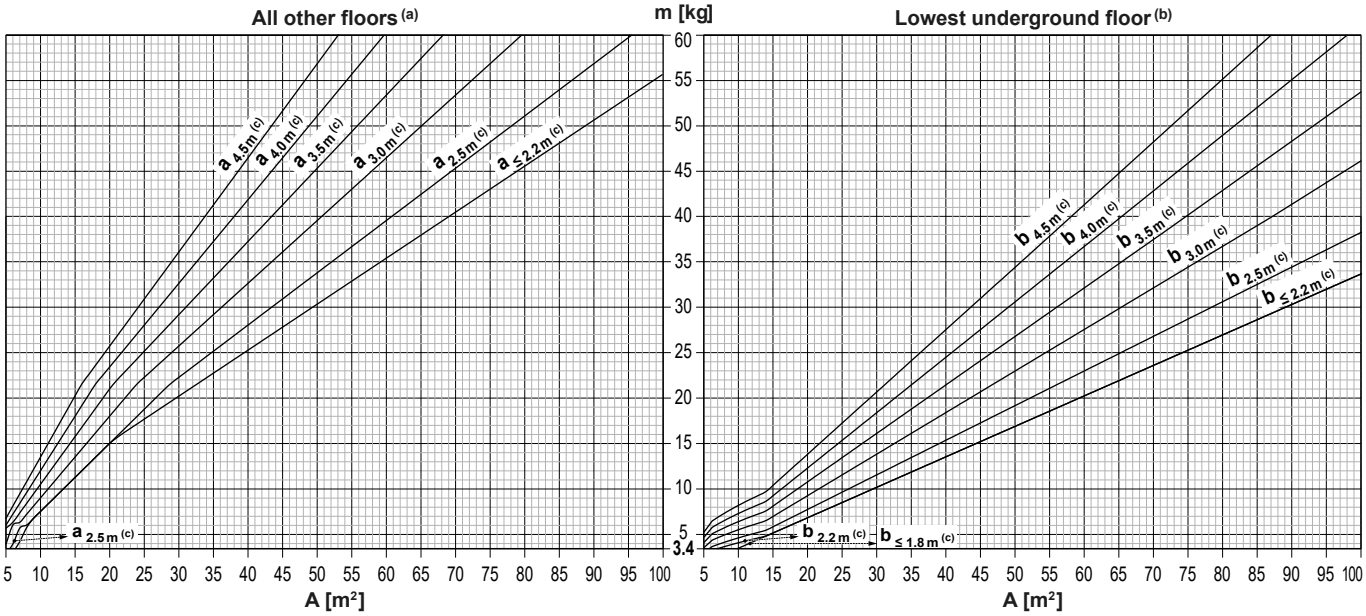

A [m²]	m [kg]													
	All other floors (a) - Effective installation height (c)							Lowest underground floor (b) - Effective installation height (c)						
	≤1.8m	2.2m	2.5m	3.0m	3.5m	4.0m	4.5m	≤1.8m	2.2m	2.5m	3.0m	3.5m	4.0m	4.5m
5	—	—	—	3.9	5.7	6.0	6.8	—	—	—	3.5	4.0	4.6	5.2
6	—	—	3.9	6.0	6.3	7.2	8.1	—	—	3.5	4.1	4.8	5.5	6.2
7	4.2	4.2	5.7	6.3	7.4	8.4	9.5	—	—	3.8	4.5	5.3	6.0	6.8
8	5.7	5.7	6.0	7.2	8.4	9.6	10.8	—	3.6	4.0	4.8	5.7	6.5	7.3
9	6.8	6.8	6.8	8.1	9.5	10.8	12.2	—	3.8	4.3	5.1	6.0	6.9	7.7
10	7.5	7.5	7.5	9.0	10.5	12.0	13.5	3.4	4.0	4.5	5.4	6.3	7.2	8.1
11	8.3	8.3	8.3	9.9	11.6	13.2	14.9	3.7	4.2	4.7	5.7	6.6	7.6	8.5
12	9.0	9.0	9.0	10.8	12.6	14.4	16.2	4.1	4.4	4.9	5.9	6.9	7.9	8.9
13	9.8	9.8	9.8	11.7	13.7	15.6	17.6	4.4	4.5	5.1	6.2	7.2	8.2	9.3
14	10.5	10.5	10.5	12.6	14.7	16.8	18.9	4.7	4.7	5.4	6.4	7.5	8.6	9.7
15	11.3	11.3	11.3	13.5	15.8	18.0	20.3	5.1	5.1	5.8	6.9	8.1	9.2	10.4
16	12.0	12.0	12.0	14.4	16.8	19.2	21.6	5.4	5.4	6.1	7.4	8.6	9.8	11.1
17	12.8	12.8	12.8	15.3	17.9	20.4	22.6	5.7	5.7	6.5	7.8	9.1	10.4	11.7
18	13.5	13.5	13.5	16.2	18.9	21.6	23.7	6.1	6.1	6.9	8.3	9.7	11.1	12.4
19	14.3	14.3	14.3	17.1	20.0	22.5	24.7	6.4	6.4	7.3	8.7	10.2	11.7	13.1
20	15.0	15.0	15.0	18.0	21.0	23.4	25.7	6.8	6.8	7.7	9.2	10.7	12.3	13.8
21	15.6	15.6	15.8	18.9	21.9	24.3	26.8	7.1	7.1	8.1	9.7	11.3	12.9	14.5
22	16.1	16.1	16.5	19.8	22.7	25.3	27.8	7.4	7.4	8.4	10.1	11.8	13.5	15.2
23	16.7	16.7	17.3	20.7	23.5	26.2	28.8	7.8	7.8	8.8	10.6	12.4	14.1	15.9
24	17.2	17.2	18.0	21.6	24.3	27.1	29.9	8.1	8.1	9.2	11.1	12.9	14.7	16.6
25	17.7	17.7	18.8	22.3	25.1	28.0	30.9	8.4	8.4	9.6	11.5	13.4	15.4	17.3
26	18.2	18.2	19.5	23.0	26.0	28.9	31.9	8.8	8.8	10.0	12.0	14.0	16.0	18.0
27	18.7	18.7	20.3	23.7	26.8	29.9	33.0	9.1	9.1	10.4	12.4	14.5	16.6	18.7
28	19.2	19.2	21.0	24.3	27.6	30.8	34.0	9.5	9.5	10.7	12.9	15.0	17.2	19.3
29	19.7	19.7	21.7	25.0	28.4	31.7	35.0	9.8	9.8	11.1	13.4	15.6	17.8	20.0
30	20.2	20.2	22.3	25.7	29.2	32.6	36.1	10.1	10.1	11.5	13.8	16.1	18.4	20.7
31	20.7	20.7	22.8	26.4	30.0	33.6	37.1	10.5	10.5	11.9	14.3	16.7	19.0	21.4
32	21.2	21.2	23.4	27.1	30.8	34.5	38.2	10.8	10.8	12.3	14.7	17.2	19.6	22.1
33	21.7	21.7	24.0	27.8	31.6	35.4	39.2	11.1	11.1	12.7	15.2	17.7	20.3	22.8
34	22.2	22.2	24.6	28.5	32.4	36.3	40.3	11.5	11.5	13.0	15.7	18.3	20.9	23.5
35	22.7	22.7	25.1	29.2	33.2	37.2	41.3	11.8	11.8	13.4	16.1	18.8	21.5	24.2
36	23.2	23.2	25.7	29.9	34.0	38.2	42.3	12.2	12.2	13.8	16.6	19.3	22.1	24.9
37	23.7	23.7	26.3	30.6	34.8	39.1	43.3	12.5	12.5	14.2	17.0	19.9	22.7	25.6
38	24.2	24.2	26.9	31.2	35.6	40.0	44.4	12.8	12.8	14.6	17.5	20.4	23.3	26.2
39	24.8	24.8	27.4	31.9	36.4	40.9	45.4	13.2	13.2	15.0	18.0	21.0	23.9	26.9
40	25.3	25.3	28.0	32.6	37.2	41.8	46.4	13.5	13.5	15.4	18.4	21.5	24.6	27.6
41	25.8	25.8	28.6	33.3	38.0	42.8	47.5	13.8	13.8	15.7	18.9	22.0	25.2	28.3
42	26.3	26.3	29.2	34.0	38.8	43.7	48.5	14.2	14.2	16.1	19.3	22.6	25.8	29.0
43	26.8	26.8	29.8	34.7	39.7	44.6	49.6	14.5	14.5	16.5	19.8	23.1	26.4	29.7
44	27.3	27.3	30.3	35.4	40.5	45.5	50.6	14.9	14.9	16.9	20.3	23.6	27.0	30.4
45	27.8	27.8	30.9	36.1	41.3	46.4	51.6	15.2	15.2	17.3	20.7	24.2	27.6	31.1
46	28.3	28.3	31.5	36.8	42.1	47.4	52.7	15.5	15.5	17.7	21.2	24.7	28.2	31.8
47	28.8	28.8	32.1	37.5	42.9	48.3	53.7	15.9	15.9	18.0	21.6	25.3	28.9	32.5
48	29.3	29.3	32.6	38.2	43.7	49.2	54.7	16.2	16.2	18.4	22.1	25.8	29.5	33.2
49	29.8	29.8	33.2	38.8	44.5	50.1	55.8	16.5	16.5	18.8	22.6	26.3	30.1	33.8
50	30.3	30.3	33.8	39.5	45.3	51.1	56.8	16.9	16.9	19.2	23.0	26.9	30.7	34.5
51	30.8	30.8	34.4	40.2	46.1	52.0	57.8	17.2	17.2	19.6	23.5	27.4	31.3	35.2
52	31.3	31.3	34.9	40.9	46.9	52.9	58.9	17.6	17.6	20.0	23.9	27.9	31.9	35.9

A [m²]	m [kg]													
	All other floors (a) - Effective installation height (c)							Lowest underground floor (b) - Effective installation height (c)						
	≤1.8m	2.2m	2.5m	3.0m	3.5m	4.0m	4.5m	≤1.8m	2.2m	2.5m	3.0m	3.5m	4.0m	4.5m
53	31.8	31.8	35.5	41.6	47.7	53.8	59.9	17.9	17.9	20.3	24.4	28.5	32.5	36.6
54	32.4	32.4	36.1	42.3	48.5	54.7	61.0	18.2	18.2	20.7	24.9	29.0	33.2	37.3
55	32.9	32.9	36.7	43.0	49.3	55.7	62.0	18.6	18.6	21.1	25.3	29.5	33.8	38.0
56	33.4	33.4	37.2	43.7	50.1	56.6	63.0	18.9	18.9	21.5	25.8	30.1	34.4	38.7
57	33.9	33.9	37.8	44.4	50.9	57.5	63.9	19.2	19.2	21.9	26.2	30.6	35.0	39.4
58	34.4	34.4	38.4	45.1	51.7	58.4	63.9	19.6	19.6	22.3	26.7	31.2	35.6	40.1
59	34.9	34.9	39.0	45.8	52.5	59.3	63.9	19.9	19.9	22.6	27.2	31.7	36.2	40.8
60	35.4	35.4	39.5	46.4	53.4	60.3	63.9	20.3	20.3	23.0	27.6	32.2	36.8	41.4
61	35.9	35.9	40.1	47.1	54.2	61.2	63.9	20.6	20.6	23.4	28.1	32.8	37.5	42.1
62	36.4	36.4	40.7	47.8	55.0	62.1	63.9	20.9	20.9	23.8	28.6	33.3	38.1	42.8
63	36.9	36.9	41.3	48.5	55.8	63.0	63.9	21.3	21.3	24.2	29.0	33.8	38.7	43.5
64	37.4	37.4	41.8	49.2	56.6	63.9	63.9	21.6	21.6	24.6	29.5	34.4	39.3	44.2
65	37.9	37.9	42.4	49.9	57.4	63.9	63.9	22.0	22.0	24.9	29.9	34.9	39.9	44.9
66	38.4	38.4	43.0	50.6	58.2	63.9	63.9	22.3	22.3	25.3	30.4	35.5	40.5	45.6
67	38.9	38.9	43.6	51.3	59.0	63.9	63.9	22.6	22.6	25.7	30.9	36.0	41.1	46.3
68	39.4	39.4	44.1	52.0	59.8	63.9	63.9	23.0	23.0	26.1	31.3	36.5	41.8	47.0
69	40.0	40.0	44.7	52.7	60.6	63.9	63.9	23.3	23.3	26.5	31.8	37.1	42.4	47.7
70	40.5	40.5	45.3	53.4	61.4	63.9	63.9	23.6	23.6	26.9	32.2	37.6	43.0	48.4
71	41.0	41.0	45.9	54.0	62.2	63.9	63.9	24.0	24.0	27.2	32.7	38.1	43.6	49.0
72	41.5	41.5	46.4	54.7	63.0	63.9	63.9	24.3	24.3	27.6	33.2	38.7	44.2	49.7
73	42.0	42.0	47.0	55.4	63.8	63.9	63.9	24.7	24.7	28.0	33.6	39.2	44.8	50.4
74	42.5	42.5	47.6	56.1	63.9	63.9	63.9	25.0	25.0	28.4	34.1	39.8	45.4	51.1
75	43.0	43.0	48.2	56.8	63.9	63.9	63.9	25.3	25.3	28.8	34.5	40.3	46.1	51.8
76	43.5	43.5	48.7	57.5	63.9	63.9	63.9	25.7	25.7	29.2	35.0	40.8	46.7	52.5
77	44.0	44.0	49.3	58.2	63.9	63.9	63.9	26.0	26.0	29.5	35.5	41.4	47.3	53.2
78	44.5	44.5	49.9	58.9	63.9	63.9	63.9	26.3	26.3	29.9	35.9	41.9	47.9	53.9
79	45.0	45.0	50.5	59.6	63.9	63.9	63.9	26.7	26.7	30.3	36.4	42.4	48.5	54.6
80	45.5	45.5	51.1	60.3	63.9	63.9	63.9	27.0	27.0	30.7	36.8	43.0	49.1	55.3
81	46.0	46.0	51.6	61.0	63.9	63.9	63.9	27.4	27.4	31.1	37.3	43.5	49.7	56.0
82	46.5	46.5	52.2	61.6	63.9	63.9	63.9	27.7	27.7	31.5	37.8	44.1	50.3	56.6
83	47.0	47.0	52.8	62.3	63.9	63.9	63.9	28.0	28.0	31.9	38.2	44.6	51.0	57.3
84	47.6	47.6	53.4	63.0	63.9	63.9	63.9	28.4	28.4	32.2	38.7	45.1	51.6	58.0
85	48.1	48.1	53.9	63.7	63.9	63.9	63.9	28.7	28.7	32.6	39.1	45.7	52.2	58.7
86	48.6	48.6	54.5	63.9	63.9	63.9	63.9	29.0	29.0	33.0	39.6	46.2	52.8	59.4
87	49.1	49.1	55.1	63.9	63.9	63.9	63.9	29.4	29.4	33.4	40.1	46.7	53.4	60.1
88	49.6	49.6	55.7	63.9	63.9	63.9	63.9	29.7	29.7	33.8	40.5	47.3	54.0	60.8
89	50.1	50.1	56.2	63.9	63.9	63.9	63.9	30.1	30.1	34.2	41.0	47.8	54.6	61.5
90	50.6	50.6	56.8	63.9	63.9	63.9	63.9	30.4	30.4	34.5	41.4	48.4	55.3	62.2
91	51.1	51.1	57.4	63.9	63.9	63.9	63.9	30.7	30.7	34.9	41.9	48.9	55.9	62.9
92	51.6	51.6	58.0	63.9	63.9	63.9	63.9	31.1	31.1	35.3	42.4	49.4	56.5	63.5
93	52.1	52.1	58.5	63.9	63.9	63.9	63.9	31.4	31.4	35.7	42.8	50.0	57.1	63.9
94	52.6	52.6	59.1	63.9	63.9	63.9	63.9	31.7	31.7	36.1	43.3	50.5	57.7	63.9
95	53.1	53.1	59.7	63.9	63.9	63.9	63.9	32.1	32.1	36.5	43.7	51.0	58.3	63.9
96	53.6	53.6	60.3	63.9	63.9	63.9	63.9	32.4	32.4	36.8	44.2	51.6	58.9	63.9
97	54.1	54.1	60.8	63.9	63.9	63.9	63.9	32.8	32.8	37.2	44.7	52.1	59.6	63.9
98	54.6	54.6	61.4	63.9	63.9	63.9	63.9	33.1	33.1	37.6	45.1	52.7	60.2	63.9
99	55.1	55.1	62.0	63.9	63.9	63.9	63.9	33.4	33.4	38.0	45.6	53.2	60.8	63.9
100	55.7	55.7	62.6	63.9	63.9	63.9	63.9	33.8	33.8	38.4	46.1	53.7	61.4	63.9

Table of contents

1 About this document 5

2 Specific installer safety instructions 5
2.1 Instructions for equipment using R32 refrigerant 6

For the user 7

3 User safety instructions 7
3.1 General 7
3.2 Instructions for safe operation 8

4 About the system 8
4.1 System layout 9

5 User interface 9

6 Operation 9
6.1 Operation range 9
6.2 Operating the system 9
6.2.1 About operating the system 9
6.2.2 About cooling, heating, fan only, and automatic operation 9
6.2.3 About the heating operation 9
6.2.4 To operate the system (WITHOUT cool/heat changeover remote control switch) 10
6.2.5 To operate the system (WITH cool/heat changeover remote control switch) 10
6.3 Using the dry program 10
6.3.1 About the dry program 10
6.3.2 To use the dry program (WITHOUT cool/heat changeover remote control switch) 10
6.3.3 To use the dry program (WITH cool/heat changeover remote control switch) 10
6.4 Adjusting the air flow direction 11
6.4.1 About the air flow flap 11
6.5 Setting the master user interface 11
6.5.1 About setting the master user interface 11
6.5.2 To designate the master user interface 11

7 Maintenance and service 11
7.1 Precautions for maintenance and service 11
7.2 About the refrigerant 12
7.3 After-sales service 12
7.3.1 Recommended maintenance and inspection 12

8 Troubleshooting 12
8.1 Error codes: Overview 13
8.2 Symptoms that are NOT system malfunctions 14
8.2.1 Symptom: The system does not operate 14
8.2.2 Symptom: Cool/Heat cannot be changed over 14
8.2.3 Symptom: Fan operation is possible, but cooling and heating do not work 14
8.2.4 Symptom: The fan speed does not correspond to the setting 14
8.2.5 Symptom: The fan direction does not correspond to the setting 14
8.2.6 Symptom: White mist comes out of a unit (Indoor unit) 14
8.2.7 Symptom: White mist comes out of a unit (Indoor unit, outdoor unit) 14
8.2.8 Symptom: The user interface reads "U4" or "U5" and stops, but then restarts after a few minutes 14
8.2.9 Symptom: Noise of air conditioners (Indoor unit) 14
8.2.10 Symptom: Noise of air conditioners (Indoor unit, outdoor unit) 14
8.2.11 Symptom: Noise of air conditioners (Outdoor unit) 14
8.2.12 Symptom: Dust comes out of the unit 14
8.2.13 Symptom: The units can give off odours 15
8.2.14 Symptom: The outdoor unit fan does not spin 15
8.2.15 Symptom: The compressor in the outdoor unit does not stop after a short heating operation 15
8.2.16 Symptom: The inside of an outdoor unit is warm even when the unit has stopped 15
8.2.17 Symptom: Hot air can be felt when the indoor unit is stopped 15

9 Relocation 15

10 Disposal 15

For the installer 15

11 About the box 15
11.1 Outdoor unit 15
11.1.1 To unpack the outdoor unit 15
11.1.2 To handle the outdoor unit 15
11.1.3 To remove the accessories from the outdoor unit 16

12 Special requirements for R32 units 16
12.1 Installation space requirements 16
12.2 System layout requirements 16
12.3 To determine the charge limit 19

13 Unit installation 21
13.1 Preparing the installation site 21
13.1.1 Installation site requirements of the outdoor unit 21
13.1.2 Additional installation site requirements of the outdoor unit in cold climates 21
13.2 Opening and closing the unit 22
13.2.1 To open the outdoor unit 22
13.2.2 To close the outdoor unit 22
13.3 Mounting the outdoor unit 22
13.3.1 To provide the installation structure 22
13.3.2 To install the outdoor unit 22
13.3.3 To provide drainage 23
13.3.4 To prevent the outdoor unit from falling over 23

14 Piping installation 23
14.1 Preparing refrigerant piping 23
14.1.1 Refrigerant piping requirements 23
14.1.2 Refrigerant piping material 23
14.1.3 Refrigerant piping insulation 23
14.1.4 To select the piping size 24
14.1.5 To select refrigerant branch kits 24
14.2 Connecting the refrigerant piping 24
14.2.1 To remove the pinched pipes 24
14.2.2 To connect the refrigerant piping to the outdoor unit 25
14.2.3 To connect the refrigerant branching kit 26
14.3 Piping details in case of replacement 26
14.4 Checking the refrigerant piping 28
14.4.1 Checking refrigerant piping: Setup 28
14.4.2 To perform a leak test 28
14.4.3 To perform vacuum drying 28
14.4.4 To check for leaks after charging refrigerant 28

15 Charging refrigerant 28
15.1 Precautions when charging refrigerant 28
15.2 To determine the additional refrigerant amount 29
15.3 To charge refrigerant 29
15.4 Error codes when charging refrigerant 30
15.5 To fix the fluorinated greenhouse gases label 30
15.6 To check refrigerant piping joints for leaks after charging refrigerant 31

16 Electrical installation 31
16.1 About electrical compliance 31
16.2 Specifications of standard wiring components 31
16.3 To connect the electrical wiring to the outdoor unit 31
16.4 To connect the external outputs 33

16.5 To connect the cool/heat selector switch option ... 33
16.6 To check the insulation resistance of the compressor ... 34

17 Finishing the outdoor unit installation 34
17.1 To insulate the refrigerant piping ... 34

18 Configuration 35
18.1 Making field settings ... 35
18.1.1 About making field settings ... 35
18.1.2 To access the field setting components ... 36
18.1.3 Field setting components ... 36
18.1.4 To access mode 1 or 2 ... 36
18.1.5 To use mode 1 ... 37
18.1.6 To use mode 2 ... 37
18.1.7 Mode 1: monitoring settings ... 37
18.1.8 Mode 2: field settings ... 37

19 Commissioning 38
19.1 Precautions when commissioning ... 38
19.2 Checklist before commissioning ... 38
19.3 Checklist during commissioning ... 39
19.4 About the system test run ... 39
19.5 To perform a test run (7-segment display) ... 39
19.6 Correcting after abnormal completion of the test run ... 39

20 Troubleshooting 40
20.1 Solving problems based on error codes ... 40
20.1.1 Error codes: Overview ... 40
20.2 Refrigerant leak detection system ... 41

21 Disposal 42

22 Technical data 42
22.1 Service space: Outdoor unit ... 42
22.2 Piping diagram: Outdoor unit ... 43
22.3 Wiring diagram: Outdoor unit ... 43

1 About this document

Target audience

Authorised installers + end users

INFORMATION

This appliance is intended to be used by expert or trained users in shops, in light industry and on farms, or for commercial use by lay persons.

Documentation set

This document is part of a documentation set. The complete set consists of:

- **General safety precautions:**
  - Safety instructions that you must read before installing
  - Format: paper (in the box of the outdoor unit)
- **Outdoor unit installation and operation manual:**
  - Installation and operation instructions
  - Format: paper (in the box of the outdoor unit)
- **Installer and user reference guide:**
  - Preparation of the installation, reference data,…
  - Detailed step-by-step instructions and background information for basic and advanced usage
  - Format: Digital files on https://www.daikin.eu. Use the search function 🔍 to find your model.

The latest revision of the supplied documentation is published on the regional Daikin website and is available via your dealer.

The original instructions are written in English. All other languages are translations of the original instructions.

2 Specific installer safety instructions

Always observe the following safety instructions and regulations.

Installation site (see "13.1 Preparing the installation site" [▶ 21])

WARNING

Follow the service space dimensions in this manual to install the unit correctly. See "22.1 Service space: Outdoor unit" [▶ 42].

WARNING

The appliance shall be stored in a room without continuously operating ignition sources (example: open flames, an operating gas appliance or an operating electric heater).

CAUTION

Appliance NOT accessible to the general public, install it in a secured area, protected from easy access.

This unit, both indoor and outdoor, is suitable for installation in a commercial and light industrial environment.

Opening and closing the unit (see "13.2 Opening and closing the unit" [▶ 22])

DANGER: RISK OF BURNING/SCALDING

DANGER: RISK OF ELECTROCUTION

Mounting the outdoor unit (see "13.3 Mounting the outdoor unit" [▶ 22])

WARNING

Fixing method of the outdoor unit MUST be in accordance with the instructions from this manual. See "13.3 Mounting the outdoor unit" [▶ 22].

Connecting the refrigerant piping (see "14.2 Connecting the refrigerant piping" [▶ 24])

WARNING

Any gas or oil remaining inside the stop valve may blow off the pinched piping.

If these instructions are NOT followed correctly it may result in property damage or personal injury, which may be serious depending on the circumstances.

WARNING

NEVER remove the pinched piping by brazing.

Any gas or oil remaining inside the stop valve may blow off the pinched piping.

CAUTION

Do NOT vent gases into the atmosphere.

WARNING

Provide adequate measures to prevent that the unit can be used as a shelter by small animals. Small animals that make contact with electrical parts can cause malfunctions, smoke or fire.

NOTICE

NEVER install a drier to this unit to guarantee its lifetime. The drying material may dissolve and damage the system.

Charging refrigerant (see "15 Charging refrigerant" [▸ 28])

WARNING

- The refrigerant inside the unit is mildly flammable, but normally does NOT leak. If the refrigerant leaks in the room and comes in contact with fire from a burner, a heater, or a cooker, this may result in fire, or the formation of a harmful gas.
- Turn OFF any combustible heating devices, ventilate the room, and contact the dealer where you purchased the unit.
- Do NOT use the unit until a service person confirms that the part from which the refrigerant leaked has been repaired.

WARNING

Charging of refrigerant MUST be in accordance with the instructions from this manual. See "15 Charging refrigerant" [▸ 28].

WARNING

- Only use R32 as refrigerant. Other substances may cause explosions and accidents.
- R32 contains fluorinated greenhouse gases. Its global warming potential (GWP) value is 675. Do NOT vent these gases into the atmosphere.
- When charging refrigerant, ALWAYS use protective gloves and safety glasses.

Electrical installation (see "16 Electrical installation" [▸ 31])

WARNING

- All wiring MUST be performed by an authorised electrician and MUST comply with the national wiring regulation.
- Make electrical connections to the fixed wiring.
- All components procured on-site and all electrical construction MUST comply with the applicable legislation.

WARNING

Electrical wiring MUST be in accordance with the instructions from this manual. See "16 Electrical installation" [▸ 31].

WARNING

ALWAYS use multicore cable for power supply cables.

WARNING

- If the power supply has a missing or wrong N-phase, equipment might break down.
- Do NOT exchange L- and N-phase wires, the unit will be damaged.
- Establish proper earthing. Do NOT earth the unit to a utility pipe, surge absorber, or telephone earth. Incomplete earthing may cause electrical shocks.
- Install the required fuses or circuit breakers.
- Secure the electrical wiring with cable ties so that the cables do NOT come in contact with sharp edges or piping, particularly on the high-pressure side.
- Do NOT install a phase advancing capacitor, because this unit is equipped with an inverter. A phase advancing capacitor will reduce performance and may cause accidents.

WARNING

If the supply cord is damaged, it MUST be replaced by the manufacturer, its service agent or similarly qualified persons in order to avoid a hazard.

CAUTION

Do NOT push or place redundant cable length into the unit.

WARNING

Do NOT extend the power supply or the interconnection cable by using wire connectors, wire connection clamps, taped wires, extension cords.

These can cause overheating, electric shock or fire.

Commissioning (see "19 Commissioning" [▸ 38])

CAUTION

Do NOT perform the test operation while working on the indoor unit(s).

When performing the test operation, NOT ONLY the outdoor unit, but the connected indoor unit will operate as well. Working on an indoor unit while performing a test operation is dangerous.

CAUTION

Do NOT insert fingers, rods or other objects into the air inlet or outlet. Do NOT remove the fan guard. When the fan is rotating at high speed, it will cause injury.

Troubleshooting (see "20 Troubleshooting" [▸ 40])

WARNING

- When carrying out an inspection on the switch box of the unit, ALWAYS make sure that the unit is disconnected from the mains. Turn off the respective circuit breaker.
- When a safety device was activated, stop the unit and find out why the safety device was activated before resetting it. NEVER shunt safety devices or change their values to a value other than the factory default setting. If you are unable to find the cause of the problem, call your dealer.

WARNING

Prevent hazards due to inadvertent resetting of the thermal cut-out: power to this appliance MUST NOT be supplied through an external switching device, such as a timer, or connected to a circuit that is regularly turned ON and OFF by the utility.

2.1 Instructions for equipment using R32 refrigerant

A2L **WARNING: MILDLY FLAMMABLE MATERIAL**

The refrigerant inside this unit is mildly flammable.

WARNING

- Do NOT pierce or burn refrigerant cycle parts.
- Do NOT use cleaning materials or means to accelerate the defrosting process other than those recommended by the manufacturer.
- Be aware that the refrigerant inside the system is odourless.

WARNING

The appliance shall be stored so as to prevent mechanical damage and in a well-ventilated room without continuously operating ignition sources (example: open flames, an operating gas appliance or an operating electric heater) and have a room size as specified below.

WARNING

Make sure installation, servicing, maintenance and repair comply with instructions from Daikin and with applicable legislation (for example national gas regulation) and are executed ONLY by authorised persons.

WARNING

- Take precautions to avoid excessive vibration or pulsation to refrigeration piping.
- Protect the protection devices, piping and fittings as much as possible against adverse environmental effects.
- Provide space for expansion and contraction of long runs of piping.
- Design and install piping in refrigerating systems such as to minimise the likelihood of hydraulic shock damaging the system.
- Mount the indoor equipment and pipes securely and protect them to avoid accidental rupture of equipment or pipes in case of events such as moving furniture or reconstruction activities.

WARNING

If one or more rooms are connected to the unit using a duct system, make sure:

- there are no operating ignition sources (example: open flames, an operating gas appliance or an operating electric heater) in case the floor area is less than the minimum floor area A (m²).
- no auxiliary devices, which may be a potential ignition source, are installed in the duct work (example: hot surfaces with a temperature exceeding 700°C and electric switching device);
- only auxiliary devices approved by the manufacturer are used in the duct work;
- air inlet AND outlet are connected directly to the same room by ducting. Do NOT use spaces such as a false ceiling as a duct for the air inlet or outlet.

WARNING

Safety shut-off valves shall not be reset until the room has been ventilated. Resetting may result in additional flammable refrigerant to be released into the room.

CAUTION

Do NOT use potential sources of ignition in searching for or detection of refrigerant leaks.

NOTICE

- Do NOT re-use joints and copper gaskets which have been used already.
- Joints made in the installation between parts of the refrigerant system shall be accessible for maintenance purposes.

See "12.3 To determine the charge limit" [▶ 19] to check if your system meets the requirement for charge limitation.

For the user

3 User safety instructions

Always observe the following safety instructions and regulations.

3.1 General

WARNING

If you are NOT sure how to operate the unit, contact your installer.

WARNING

This appliance can be used by children aged from 8 years and above and persons with reduced physical, sensory or mental capabilities or lack of experience and knowledge if they have been given supervision or instruction concerning use of the appliance in a safe way and understand the hazards involved.

Children SHALL NOT play with the appliance.

Cleaning and user maintenance SHALL NOT be made by children without supervision.

WARNING

To prevent electrical shocks or fire:

- Do NOT rinse the unit.
- Do NOT operate the unit with wet hands.
- Do NOT place any objects containing water on the unit.

CAUTION

- Do NOT place any objects or equipment on top of the unit.
- Do NOT sit, climb or stand on the unit.

- Units are marked with the following symbol:

This means that electrical and electronic products may NOT be mixed with unsorted household waste. Do NOT try to dismantle the system yourself: dismantling the system, treatment of the refrigerant, of oil and of other parts MUST be done by an authorised installer and MUST comply with applicable legislation.

Units MUST be treated at a specialised treatment facility for reuse, recycling and recovery. By ensuring this product is disposed of correctly, you will help to prevent potential negative consequences for the environment and human health. For more information, contact your installer or local authority.

- Batteries are marked with the following symbol:

This means that the batteries may NOT be mixed with unsorted household waste. If a chemical symbol is printed beneath the symbol, this chemical symbol means that the battery contains a heavy metal above a certain concentration.

Possible chemical symbols are: Pb: lead (>0.004%).

Waste batteries MUST be treated at a specialised treatment facility for reuse. By ensuring waste batteries are disposed of correctly, you will help to prevent potential negative consequences for the environment and human health.

3.2 Instructions for safe operation

CAUTION

- NEVER touch the internal parts of the controller.
- Do NOT remove the front panel. Some parts inside are dangerous to touch and appliance problems may happen. For checking and adjusting the internal parts, contact your dealer.

WARNING

NEVER touch the air outlet or the horizontal blades while the swing flap is in operation. Fingers may become caught or the unit may break down.

CAUTION

Do NOT operate the system when using a room fumigation-type insecticide. Chemicals could collect in the unit, and endanger the health of people who are hypersensitive to chemicals.

CAUTION

It is unhealthy to expose your body to the air flow for a long time.

CAUTION

To avoid oxygen deficiency, ventilate the room sufficiently if equipment with burner is used together with the system.

WARNING

This unit contains electrical and hot parts.

WARNING

Before operating the unit, be sure the installation has been carried out correctly by an installer.

WARNING

NEVER touch the air outlet or the horizontal blades while the swing flap is in operation. Fingers may become caught or the unit may break down.

CAUTION

Do NOT insert fingers, rods or other objects into the air inlet or outlet. Do NOT remove the fan guard. When the fan is rotating at high speed, it will cause injury.

CAUTION: Pay attention to the fan!

It is dangerous to inspect the unit while the fan is running.

Make sure to turn OFF the main switch before executing any maintenance task.

CAUTION

After a long use, check the unit stand and fitting for damage. If damaged, the unit may fall and result in injury.

WARNING

NEVER inspect or service the unit by yourself. Ask a qualified service person to perform this work.

WARNING

NEVER replace a fuse with a fuse of a wrong ampere ratings or other wires when a fuse blows out. Use of wire or copper wire may cause the unit to break down or cause a fire.

WARNING

- Do NOT modify, disassemble, remove, reinstall or repair the unit yourself as incorrect dismantling or installation may cause an electrical shock or fire. Contact your dealer.
- In case of accidental refrigerant leaks, make sure there are no naked flames. The refrigerant itself is entirely safe, non-toxic and mildly flammable, but it will generate toxic gas when it accidentally leaks into a room where combustible air from fan heaters, gas cookers, etc. is present. Always have qualified service personnel confirm that the point of leakage has been repaired or corrected before resuming operation.

WARNING

- Do NOT pierce or burn refrigerant cycle parts.
- Do NOT use cleaning materials or means to accelerate the defrosting process other than those recommended by the manufacturer.
- Be aware that the refrigerant inside the system is odourless.

WARNING

The appliance shall be stored in a room without continuously operating ignition sources (example: open flames, an operating gas appliance or an operating electric heater).

A2L **WARNING: MILDLY FLAMMABLE MATERIAL**

The refrigerant inside this unit is mildly flammable.

WARNING

Stop operation and shut OFF the power if anything unusual occurs (burning smells etc.).

Leaving the unit running under such circumstances may cause breakage, electrical shock or fire. Contact your dealer.

CAUTION

NEVER expose little children, plants or animals directly to the airflow.

WARNING

The unit is equipped with a refrigerant leak detection system for safety.

To be effective, the unit MUST be electrically powered at all times after installation, except for maintenance.

4 About the system

The VRV 5-S uses R32 refrigerant which is rated as A2L and is mildly flammable. For compliance with the requirements for enhanced tightness refrigerating systems and IEC60335-2-40 the installer must take extra measures. For more information, see "2.1 Instructions for equipment using R32 refrigerant" [▸ 6].

The indoor unit part of this VRV 5-S heat pump system can be used for heating/cooling applications. The type of indoor unit which can be used depends on the outdoor units series.

WARNING

- Do NOT modify, disassemble, remove, reinstall or repair the unit yourself as incorrect dismantling or installation may cause an electrical shock or fire. Contact your dealer.
- In case of accidental refrigerant leaks, make sure there are no naked flames. The refrigerant itself is entirely safe, non-toxic and mildly flammable, but it will generate toxic gas when it accidentally leaks into a room where combustible air from fan heaters, gas cookers, etc. is present. Always have qualified service personnel confirm that the point of leakage has been repaired or corrected before resuming operation.

NOTICE

Do NOT use the system for other purposes. In order to avoid any quality deterioration, do NOT use the unit for cooling precision instruments, food, plants, animals, or works of art.

NOTICE

For future modifications or expansions of your system:

A full overview of allowable combinations (for future system extensions) is available in technical engineering data and should be consulted. Contact your installer to receive more information and professional advice.

NOTICE

It is NOT allowed to cool technical rooms like server rooms and data centres, where year-round cooling is required.

4.1 System layout

INFORMATION

The following figure is an example and may NOT completely match your system layout.

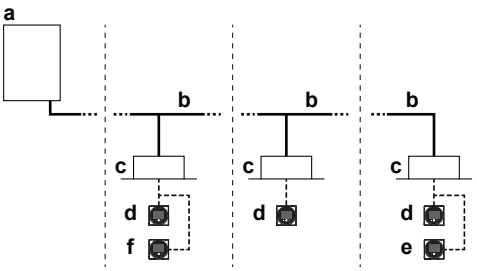

- **a** Heat pump outdoor unit
- **b** Refrigerant piping
- **c** VRV direct expansion (DX) indoor unit
- **d** Remote controller in normal mode
- **e** Remote controller in alarm only mode
- **f** Remote controller in supervisor mode (mandatory in some situations)

5 User interface

CAUTION

- NEVER touch the internal parts of the controller.
- Do NOT remove the front panel. Some parts inside are dangerous to touch and appliance problems may happen. For checking and adjusting the internal parts, contact your dealer.

This operation manual offers a non-exhaustive overview of the main functions of the system.

Detailed information on required actions to achieve certain functions can be found in the dedicated installation and operation manual of the indoor unit.

Refer to the operation manual of the installed user interface.

6 Operation

6.1 Operation range

Use the system in the following temperature and humidity ranges for safe and effective operation.

	Cooling	Heating
Outdoor temperature	–5~46°C DB	–20~21°C DB –20~15.5°C WB
Indoor temperature	21~32°C DB 14~25°C WB	15~27°C DB
Indoor humidity	≤80%[(a)]	

[(a)] To avoid condensation and water dripping out of the unit. If the temperature or the humidity is beyond these conditions, safety devices may be put in action and the air conditioner may not operate.

Above operation range is only valid in case direct expansion indoor units are connected to the VRV 5-S system.

Special operation ranges are valid in case of using AHU. They can be found in the installation/operation manual of the dedicated unit. Latest information can be found in the technical engineering data.

6.2 Operating the system

6.2.1 About operating the system

- Operation procedure varies according to the combination of outdoor unit and user interface.
- To protect the unit, turn on the main power switch 6 hours before operation.
- If the main power supply is turned off during operation, operation will restart automatically after the power turns back on again.

6.2.2 About cooling, heating, fan only, and automatic operation

- Changeover cannot be made with a user interface whose display shows "changeover under centralised control" (refer to installation and operation manual of the user interface).
- When the display "changeover under centralised control" flashes, refer to "6.5.1 About setting the master user interface" [▶ 11].
- The fan may keep on running for about 1 minute after the heating operation stops.
- The air flow rate may adjust itself depending on the room temperature or the fan may stop immediately. This is not a malfunction.

6.2.3 About the heating operation

It may take longer to reach the set temperature for general heating operation than for cooling operation.

The following operation is performed in order to prevent the heating capacity from dropping or cold air from blowing.

Defrost operation

In heating operation, freezing of the outdoor unit's air cooled coil increases over time, restricting the energy transfer to the outdoor unit's coil. Heating capability decreases and the system needs to go into defrost operation to be able to remove frost from the outdoor unit's coil. During defrost operation the heating capacity on the indoor unit side will temporarily drop until defrosting is completed. After defrosting, the unit will regain its full heating capacity.

The indoor unit will stop fan operation, the refrigerant cycle will reverse and energy from inside the building will be used to defrost the outdoor unit coil.

The indoor unit will indicate defrost operation on the display .

Hot start

In order to prevent cold air from blowing out of an indoor unit at the start of heating operation, the indoor fan is automatically stopped. The display of the user interface shows . It may take some time before the fan starts. This is not a malfunction.

6.2.4 To operate the system (WITHOUT cool/heat changeover remote control switch)

1 Press the operation mode selector button on the user interface several times and select the operation mode of your choice.

Cooling operation

Heating operation

Fan only operation

2 Press the ON/OFF button on the user interface.

Result: The operation lamp lights up and the system starts operating.

6.2.5 To operate the system (WITH cool/heat changeover remote control switch)

Overview of the changeover remote control switch

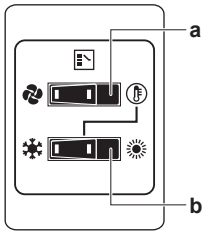

a FAN ONLY/AIR CONDITIONING SELECTOR SWITCH

Set the switch to for fan only operation or to for heating or cooling operation.

b COOL/HEAT CHANGEOVER SWITCH

Set the switch to for cooling or to for heating

Note: In case a cool/heat changeover remote control switch is used, the position of DIP switch 1 (DS1-1) on the main PCB needs to be switched to the ON position.

To start

1 Select operation mode with the cool/heat changeover switch as follows:

Cooling operation

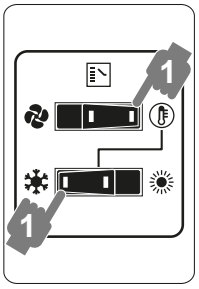

Heating operation

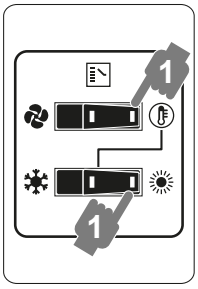

Fan only operation

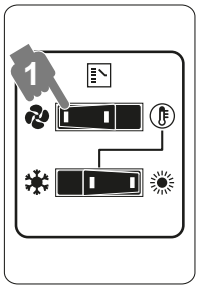

2 Press the ON/OFF button on the user interface.

Result: The operation lamp lights up and the system starts operating.

To stop

3 Press the ON/OFF button on the user interface once again.

Result: The operation lamp goes out and the system stops operating.

NOTICE

Do not turn off power immediately after the unit stops, but wait for at least 5 minutes.

To adjust

For programming temperature, fan speed and air flow direction refer to the operation manual of the user interface.

6.3 Using the dry program

6.3.1 About the dry program

- The function of this program is to decrease the humidity in your room with minimal temperature decrease (minimal room cooling).
- The microcomputer automatically determines temperature and fan speed (cannot be set by the user interface).
- The system does not go into operation if the room temperature is low (<20°C).

6.3.2 To use the dry program (WITHOUT cool/heat changeover remote control switch)

To start

1 Press the operation mode selector button on the user interface several times and select (program dry operation).

2 Press the ON/OFF button of the user interface.

Result: The operation lamp lights up and the system starts operating.

3 Press the air flow direction adjust button (only for double-flow, multi-flow, corner, ceiling-suspended and wall-mounted). Refer to "6.4 Adjusting the air flow direction" [▸ 11] for details.

To stop

4 Press the ON/OFF button on the user interface once again.

Result: The operation lamp goes out and the system stops operating.

NOTICE

Do not turn off power immediately after the unit stops, but wait for at least 5 minutes.

6.3.3 To use the dry program (WITH cool/heat changeover remote control switch)

To start

1 Select cooling operation mode with the cool/heat changeover remote control switch.

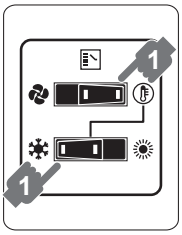

2 Press the operation mode selector button on the user interface several times and select (program dry operation).

3 Press the ON/OFF button of the user interface.

Result: The operation lamp lights up and the system starts operating.

4 Press the air flow direction adjust button (only for double-flow, multi-flow, corner, ceiling-suspended and wall-mounted). Refer to "6.4 Adjusting the air flow direction" [▶ 11] for details.

To stop

5 Press the ON/OFF button on the user interface once again.

Result: The operation lamp goes out and the system stops operating.

NOTICE

Do not turn off power immediately after the unit stops, but wait for at least 5 minutes.

6.4 Adjusting the air flow direction

Refer to the operation manual of the user interface.

6.4.1 About the air flow flap

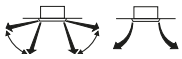

Double flow + multi-flow units

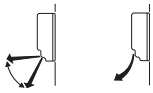

Wall-mounted units

For the following conditions, a microcomputer controls the air flow direction which may be different from the display.

Cooling	Heating
▪ When the room temperature is lower than the set temperature.	▪ When starting operation. ▪ When the room temperature is higher than the set temperature. ▪ At defrost operation.
▪ When operating continuously at horizontal air flow direction. ▪ When continuous operation with downward air flow is performed at the time of cooling with a ceiling-suspended or a wall-mounted unit, the microcomputer may control the flow direction, and then the user interface indication will also change.	

The air flow direction can be adjusted in one of the following ways:

- The air flow flap itself adjusts its position.
- The air flow direction can be fixed by the user.
- Automatic and desired position .

WARNING

NEVER touch the air outlet or the horizontal blades while the swing flap is in operation. Fingers may become caught or the unit may break down.

NOTICE

- The movable limit of the flap is changeable. Contact your dealer for details. (only for double-flow, multi-flow, corner, ceiling-suspended and wall-mounted).
- Avoid operating in the horizontal direction . It may cause dew or dust to settle on the ceiling or flap.

6.5 Setting the master user interface

6.5.1 About setting the master user interface

INFORMATION

The following figure is an example and may NOT completely match your system layout.

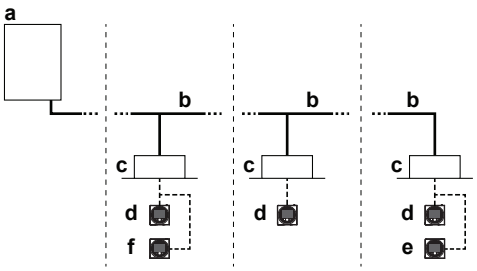

a Heat pump outdoor unit
b Refrigerant piping
c VRV direct expansion (DX) indoor unit
d Remote controller in normal mode
e Remote controller in alarm only mode
f Remote controller in supervisor mode (mandatory in some situations)

When the system is installed as shown in the figure above, it is necessary to designate one of the user interfaces as the master user interface.

The displays of slave user interfaces show (changeover under centralised control) and slave user interfaces automatically follow the operation mode directed by the master user interface.

Only the master user interface can select heating or cooling mode (cooling/heating masterhood).

6.5.2 To designate the master user interface

1 Press the operation mode selector button of the current master user interface for 4 seconds. In case this procedure was not yet performed, the procedure can be executed on the first user interface operated.

Result: The display showing (changeover under centralised control) of all slave user interfaces connected to the same outdoor unit flashes.

2 Press the operation mode selector button of the controller that you wish to designate as the master user interface.

Result: Designation is completed. This user interface is designated as the master user interface and the display showing (changeover under centralised control) vanishes. The displays of other user interfaces show (changeover under centralised control).

Refer to the operation manual of the user interface.

7 Maintenance and service

In this chapter

7.1 Precautions for maintenance and service 11
7.2 About the refrigerant 12
7.3 After-sales service 12
7.3.1 Recommended maintenance and inspection 12

7.1 Precautions for maintenance and service

CAUTION

See "3 User safety instructions" [▶ 7] to acknowledge all related safety instructions.

NOTICE

NEVER inspect or service the unit by yourself. Ask a qualified service person to perform this work.

NOTICE

Do NOT wipe the controller operation panel with benzine, thinner, chemical dust cloth, etc. The panel may get discoloured or the coating peeled off. If it is heavily dirty, soak a cloth in water-diluted neutral detergent, squeeze it well and wipe the panel clean. Wipe it with another dry cloth.

7.2 About the refrigerant

This product contains fluorinated greenhouse gases. Do NOT vent gases into the atmosphere.

Refrigerant type: R32

Global warming potential (GWP) value: 675

Periodical inspections for refrigerant leaks may be required depending on the applicable legislation. Contact your installer for more information.

A2L **WARNING: MILDLY FLAMMABLE MATERIAL**

The refrigerant inside this unit is mildly flammable.

WARNING

- The refrigerant inside the unit is mildly flammable, but normally does NOT leak. If the refrigerant leaks in the room and comes in contact with fire from a burner, a heater, or a cooker, this may result in fire, or the formation of a harmful gas.
- Turn OFF any combustible heating devices, ventilate the room, and contact the dealer where you purchased the unit.
- Do NOT use the unit until a service person confirms that the part from which the refrigerant leaked has been repaired.

WARNING

The appliance shall be stored in a room without continuously operating ignition sources (example: open flames, an operating gas appliance or an operating electric heater).

WARNING

- Do NOT pierce or burn refrigerant cycle parts.
- Do NOT use cleaning materials or means to accelerate the defrosting process other than those recommended by the manufacturer.
- Be aware that the refrigerant inside the system is odourless.

NOTICE

Applicable legislation on **fluorinated greenhouse gases** requires that the refrigerant charge of the unit is indicated both in weight and CO_2 equivalent.

Formula to calculate the quantity in CO_2 equivalent tonnes: GWP value of the refrigerant × total refrigerant charge [in kg]/1000

Contact your installer for more information.

7.3 After-sales service

7.3.1 Recommended maintenance and inspection

Since dust collects when using the unit for several years, performance of the unit will deteriorate to some extent. As taking apart and cleaning interiors of units requires technical expertise and in order to ensure the best possible maintenance of your units, we recommend to enter into a maintenance and inspection contract on top of normal maintenance activities. Our network of dealers has access to a permanent stock of essential components in order to keep your unit in operation as long as possible. Contact your dealer for more information.

When asking your dealer for an intervention, always state:

- The complete model name of the unit.
- The manufacturing number (stated on the nameplate of the unit).
- The installation date.
- The symptoms or malfunction, and details of the defect.

WARNING

- Do NOT modify, disassemble, remove, reinstall or repair the unit yourself as incorrect dismantling or installation may cause an electrical shock or fire. Contact your dealer.
- In case of accidental refrigerant leaks, make sure there are no naked flames. The refrigerant itself is entirely safe, non-toxic and mildly flammable, but it will generate toxic gas when it accidentally leaks into a room where combustible air from fan heaters, gas cookers, etc. is present. Always have qualified service personnel confirm that the point of leakage has been repaired or corrected before resuming operation.

8 Troubleshooting

If one of the following malfunctions occurs, take the measures shown below and contact your dealer.

WARNING

Stop operation and shut OFF the power if anything unusual occurs (burning smells etc.).

Leaving the unit running under such circumstances may cause breakage, electrical shock or fire. Contact your dealer.

The system MUST be repaired by a qualified service person.

Malfunction	Measure
If a safety device such as a fuse, a breaker or an earth leakage breaker frequently actuates or the ON/OFF switch does NOT properly work.	Turn OFF the main power switch.
The operation switch does NOT work well.	Turn OFF the power supply.
If the user interface display indicates the unit number, the operation lamp flashes and the malfunction code appears.	Notify your installer and report the malfunction code.

If the system does NOT operate properly except for the above mentioned cases and none of the above mentioned malfunctions is evident, investigate the system in accordance with the following procedures.

Malfunction	Measure
If a refrigerant leak occurs (error code A0/CH)	▪ Actions will be taken by the system. Do NOT turn OFF the power supply. ▪ Notify your installer and report the malfunction code.
If the system does not operate at all.	▪ Check if there is no power failure. Wait until power is restored. If power failure occurs during operation, the system automatically restarts immediately after power is restored. ▪ Check if no fuse has blown or breaker is activated. Change the fuse or reset the breaker if necessary.

Malfunction	Measure
If the system goes into fan only operation, but as soon as it goes into heating or cooling operation, the system stops.	▪ Check if air inlet or outlet of outdoor or indoor unit is not blocked by obstacles. Remove any obstacles and make sure the air can flow freely. ▪ Check if the user interface display shows ⚠ on the home screen. Refer to the installation and operation manual delivered with the indoor unit.
The system operates but cooling or heating is insufficient.	▪ Check if air inlet or outlet of outdoor or indoor unit is not blocked by obstacles. Remove any obstacles and make sure the air can flow freely. ▪ Check if the air filter is not clogged (refer to "Maintenance" in the indoor unit manual). ▪ Check the temperature setting. ▪ Check the fan speed setting on your user interface. ▪ Check for open doors or windows. Close doors and windows to prevent wind from coming in. ▪ Check if there are too many occupants in the room during cooling operation. Check if the heat source of the room is excessive. ▪ Check if direct sunlight enters the room. Use curtains or blinds. ▪ Check if the air flow angle is proper.

After checking all the items above, if it is impossible to fix the problem yourself, contact your installer and state the symptoms, the complete model name of the unit (with manufacturing number if possible) and the installation date.

8.1 Error codes: Overview

In case a malfunction code appears on the indoor unit user interface display, contact your installer and inform the malfunction code, the unit type, and serial number (you can find this information on the nameplate of the unit).

For your reference, a list with malfunction codes is provided. You can, depending on the level of the malfunction code, reset the code by pushing the ON/OFF button. If not, ask your installer for advice.

Main code	Contents
A0	External protection device was activated
A0-11	The R32 sensor in one of the indoor units has detected a refrigerant leak[(a)]
A0/CH	Safety system error (leak detection)[(a)]
A1	EEPROM failure (indoor)
A3	Drain system malfunction (indoor)
A6	Fan motor malfunction (indoor)
A7	Swing flap motor malfunction (indoor)
A9	Expansion valve malfunction (indoor)
AF	Drain malfunction (indoor unit)
AH	Filter dust chamber malfunction (indoor)
AJ	Capacity setting malfunction (indoor)
C1	Transmission malfunction between main PCB and sub PCB (indoor)
C4	Heat exchanger thermistor malfunction (indoor; liquid)
C5	Heat exchanger thermistor malfunction (indoor; gas)
C9	Suction air thermistor malfunction (indoor)
CA	Discharge air thermistor malfunction (indoor)

Main code	Contents
CE	Movement detector or floor temperature sensor malfunction (indoor)
CH-01	R32 sensor malfunction in one of the indoor units[(a)]
CH-02	R32 sensor end of lifetime in one of the indoor units[(a)]
CH-05	R32 sensor 6 months before end of lifetime in one of the indoor units[(a)]
CH-10	Waiting for R32 sensor replacement confirmation from one of the indoor units[(a)]
CJ	User interface thermistor malfunction (indoor)
E1	PCB malfunction (outdoor)
E3	High pressure switch was activated
E4	Low pressure malfunction (outdoor)
E5	Compressor lock detection (outdoor)
E7	Fan motor malfunction (outdoor)
E9	Electronic expansion valve malfunction (outdoor)
F3	Discharge temperature malfunction (outdoor)
F4	Abnormal suction temperature (outdoor)
F6	Refrigerant overcharge detection
H3	High pressure switch malfunction
H7	Fan motor trouble (outdoor)
H9	Ambient temperature sensor malfunction (outdoor)
J1	Pressure sensor malfunction
J2	Current sensor malfunction
J3	Discharge temperature sensor malfunction (outdoor)
J5	Suction temperature sensor malfunction (outdoor)
J6	De-icing temperature sensor malfunction (outdoor)
J7	Liquid temperature sensor (after subcool HE) malfunction (outdoor)
J9	Gas temperature sensor (after subcool HE) malfunction (outdoor)
JA	High pressure sensor malfunction (S1NPH)
JC	Low pressure sensor malfunction (S1NPL)
L1	INV PCB abnormal
L4	Fin temperature abnormal
L5	Inverter PCB faulty
L8	Compressor over current detected
L9	Compressor lock (startup)
LC	Shut-off PCB transmission trouble or disconnection
P1	INV unbalanced power supply voltage
P4	Fin thermistor malfunction
PJ	Capacity setting malfunction (outdoor)
U0	Abnormal low pressure drop, faulty expansion valve
U2	INV voltage power shortage
U3	System test run not yet executed
U4	Faulty wiring indoor/outdoor
U5	Abnormal user interface - indoor communication
U8	Abnormal main-sub user interface communication
U9	System mismatch. Wrong type of indoor units combined. Indoor unit malfunction.
UA	Connection malfunction over indoor units or type mismatch
UA-55	System lock
UA-56	Back-up PCB error
UA-57	External ventilation input error
UC	Centralised address duplication

Main code	Contents
UE	Malfunction in communication centralised control device - indoor unit
UF	Auto address malfunction (inconsistency)
UH	Auto address malfunction (inconsistency)

[a] The error code is only shown on the user interface of the indoor unit where the error occurs.

8.2 Symptoms that are NOT system malfunctions

The following symptoms are NOT system malfunctions:

8.2.1 Symptom: The system does not operate

- The air conditioner does not start immediately after the ON/OFF button on the user interface is pressed. If the operation lamp lights, the system is in normal condition. To prevent overloading of the compressor motor, the air conditioner starts 5 minutes after it is turned ON again in case it was turned OFF just before. The same starting delay occurs after the operation mode selector button was used.
- If "Under Centralised Control" is displayed on the user interface, pressing the operation button causes the display to blink for a few seconds. The blinking display indicates that the user interface cannot be used.
- The system does not start immediately after the power supply is turned on. Wait one minute until the microcomputer is prepared for operation.

8.2.2 Symptom: Cool/Heat cannot be changed over

- When the display shows (changeover under centralised control), it shows that this is a slave user interface.
- When the cool/heat changeover remote control switch is installed and the display shows (changeover under centralised control), this is because cool/heat changeover is controlled by the cool/ heat changeover remote control switch. Ask your dealer where the remote control switch is installed.

8.2.3 Symptom: Fan operation is possible, but cooling and heating do not work

Immediately after the power is turned on. The microcomputer is getting ready to operate and is performing a communication check with the indoor unit(s). Please wait 12 minutes maximally until this process is finished.

8.2.4 Symptom: The fan speed does not correspond to the setting

The fan speed does not change even if the fan speed adjustment button is pressed. During heating operation, when the room temperature reaches the set temperature, the outdoor unit goes off and the indoor unit changes to whisper fan speed. This is to prevent cold air blowing directly on occupants of the room. The fan speed will not change even when another indoor unit is in heating operation, if the button is pressed.

8.2.5 Symptom: The fan direction does not correspond to the setting

The fan direction does not correspond with the user interface display. The fan direction does not swing. This is because the unit is being controlled by the microcomputer.

8.2.6 Symptom: White mist comes out of a unit (Indoor unit)

- When humidity is high during cooling operation. If the interior of an indoor unit is extremely contaminated, the temperature distribution inside a room becomes uneven. It is necessary to clean the interior of the indoor unit. Ask your dealer for details on cleaning the unit. This operation requires a qualified service person.
- Immediately after the cooling operation stops and if the room temperature and humidity are low. This is because warm refrigerant gas flows back into the indoor unit and generates steam.

8.2.7 Symptom: White mist comes out of a unit (Indoor unit, outdoor unit)

When the system is changed over to heating operation after defrost operation. Moisture generated by defrost becomes steam and is exhausted.

8.2.8 Symptom: The user interface reads "U4" or "U5" and stops, but then restarts after a few minutes

This is because the user interface is intercepting noise from electric appliances other than the air conditioner. The noise prevents communication between the units, causing them to stop. Operation automatically restarts when the noise ceases. A power reset may help to remove this error.

8.2.9 Symptom: Noise of air conditioners (Indoor unit)

- A "zeen" sound is heard immediately after the power supply is turned on. The electronic expansion valve inside an indoor unit starts working and makes the noise. Its volume will reduce in about one minute.
- A continuous low "shah" sound is heard when the system is in cooling operation or at a stop. When the drain pump (optional accessories) is in operation, this noise is heard.
- A "pishi-pishi" squeaking sound is heard when the system stops after heating operation. Expansion and contraction of plastic parts caused by temperature change make this noise.
- A low "sah", "choro-choro" sound is heard while the indoor unit is stopped. When another indoor unit is in operation, this noise is heard. In order to prevent oil and refrigerant from remaining in the system, a small amount of refrigerant is kept flowing.

8.2.10 Symptom: Noise of air conditioners (Indoor unit, outdoor unit)

- A continuous low hissing sound is heard when the system is in cooling or defrost operation. This is the sound of refrigerant gas flowing through both indoor and outdoor units.
- A hissing sound which is heard at the start or immediately after stopping operation or defrost operation. This is the noise of refrigerant caused by flow stop or flow change.

8.2.11 Symptom: Noise of air conditioners (Outdoor unit)

When the tone of operating noise changes. This noise is caused by the change of frequency.

8.2.12 Symptom: Dust comes out of the unit

When the unit is used for the first time in a long time. This is because dust has gotten into the unit.

8.2.13 Symptom: The units can give off odours

The unit can absorb the smell of rooms, furniture, cigarettes, etc., and then emit it again.

8.2.14 Symptom: The outdoor unit fan does not spin

During operation, the speed of the fan is controlled in order to optimise product operation.

8.2.15 Symptom: The compressor in the outdoor unit does not stop after a short heating operation

This is to prevent refrigerant from remaining in the compressor. The unit will stop after 5 to 10 minutes.

8.2.16 Symptom: The inside of an outdoor unit is warm even when the unit has stopped

This is because the crankcase heater is warming the compressor so that the compressor can start smoothly.

8.2.17 Symptom: Hot air can be felt when the indoor unit is stopped

Several different indoor units are being run on the same system. When another unit is running, some refrigerant will still flow through the unit.

9 Relocation

Contact your dealer to remove and reinstall the entire unit. Moving units requires technical expertise.

10 Disposal

This unit uses hydrofluorocarbon. Contact your dealer when discarding this unit. It is required by law to collect, transport and discard the refrigerant in accordance with the "hydrofluorocarbon collection and destruction" regulations.

NOTICE

Do NOT try to dismantle the system yourself: dismantling of the system, treatment of the refrigerant, oil and other parts MUST comply with applicable legislation. Units MUST be treated at a specialised treatment facility for reuse, recycling and recovery.

For the installer

11 About the box

Keep the following in mind:

- At delivery, the unit MUST be checked for damage and completeness. Any damage or missing parts MUST be reported immediately to the claims agent of the carrier.
- Bring the packed unit as close as possible to its final installation position to prevent damage during transport.
- Prepare in advance the path along which you want to bring the unit to its final installation position.

11.1 Outdoor unit

11.1.1 To unpack the outdoor unit

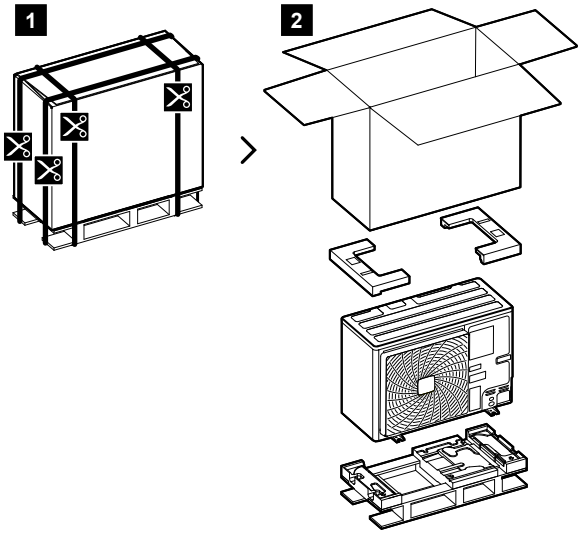

11.1.2 To handle the outdoor unit

CAUTION

To avoid injury, do NOT touch the air inlet or aluminium fins of the unit.

Forklift. As long as the unit remains on its pallet, you can also use a forklift.

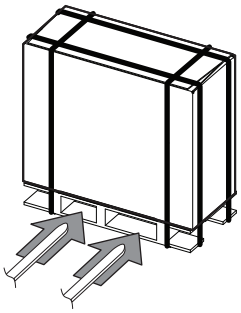

Carry the unit slowly as shown:

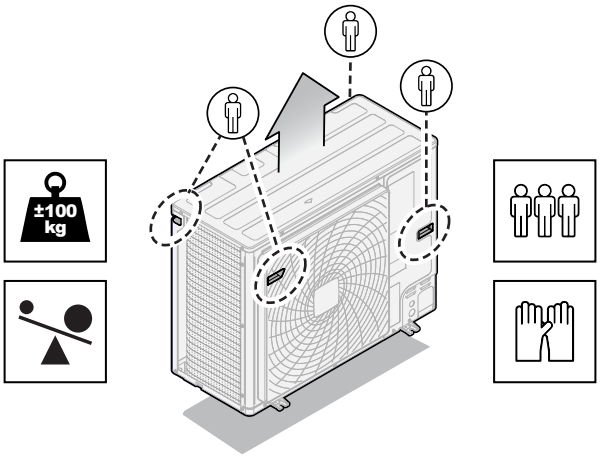

11.1.3 To remove the accessories from the outdoor unit

1 Remove the service cover. See "13.2.1 To open the outdoor unit" [▸ 22].

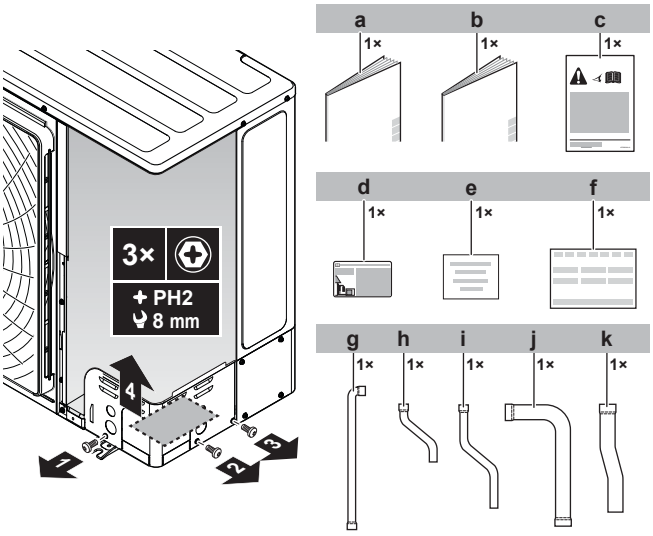

a General safety precautions
b Outdoor unit installation manual
c Caution label
d Fluorinated greenhouse gases label
e Additional refrigerant charge label
f Declaration of conformity
g Liquid line piping — bend
h Liquid line piping — short
i Liquid line piping — long
j Gas line piping — bend
k Gas line piping

12 Special requirements for R32 units

12.1 Installation space requirements

WARNING

If the appliance contains R32 refrigerant, the floor area of the room in which the appliance is stored shall be at least 98.3 m².

NOTICE

- The pipework shall be securely mounted and guarded protected from physical damage.
- Keep the pipework installation to a minimum.

12.2 System layout requirements

The VRV 5-S uses R32 refrigerant which is rated as A2L and is mildly flammable.

To comply with the requirements of enhanced tightness refrigerating systems of the IEC 60335-2-40, this system is equipped with shut-off valves in the outdoor unit and an alarm in the remote controller. In case the requirements of this manual are followed, no additional safety measures are needed.

A big range of charge and room area combinations is allowed thanks to the countermeasures that are implemented in the unit by default.

Follow the installation requirements below to ensure that the complete system is compliant to legislation.

Outdoor unit installation

The outdoor unit must be installed outside. For indoor installation of the outdoor unit, additional measures can be necessary to comply with the applicable legislation.

A terminal for external output is available in the outdoor unit. This SVS output can be used when additional countermeasures are needed. The SVS output is a contact on terminal X2M that closes in case a leak is detected, failure or disconnection of the R32 sensor (located in the indoor unit).

For more information about the SVS output, see "16.4 To connect the external outputs" [▸ 33].

Indoor unit installation

NOTICE

If one or more rooms are connected to the unit using a duct system, make sure air inlet AND outlet are connected directly to the same room by ducting. Do NOT use spaces such as a false ceiling as a duct for the air inlet or outlet.

For installation of the indoor unit, refer to the installation and operation manual delivered with the indoor unit. For compatibility of indoor units refer to the latest version of the technical data book of this unit.

The total amount of refrigerant in the system shall be less than or equal to the maximum allowed total refrigerant amount. The maximum allowed total refrigerant amount depends on the area of the rooms being served by the system and the rooms in the lowest underground floor.

See "12.3 To determine the charge limit" [▸ 19] to check if your system meets the requirement for charge limitation.

An optional output PCB for the indoor unit can be added to provide output for external device. The output PCB will trigger in case a leak is detected, the R32 sensor fails or when the sensor is disconnected. For exact model name see option list of the indoor unit. For more information about this option, refer to the installation manual of the optional output PCB.

Piping requirements

Piping must be installed according to instructions given in "14 Piping installation" [▸ 23]. Only mechanical joints (e.g. braze+flare connections) that are compliant with the latest version of ISO14903 can be used.

For piping installed in the occupied space, please make sure that the piping is protected against accidental damage. Piping should be checked according to the procedure as mentioned in "14.4 Checking the refrigerant piping" [▸ 28].

Remote controller requirements

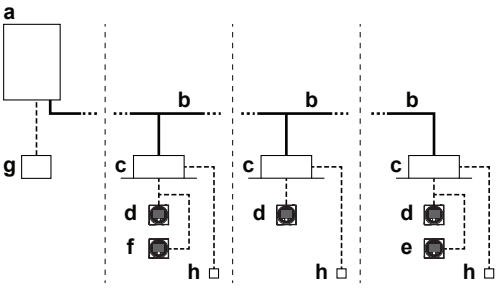

- **a** Heat pump outdoor unit
- **b** Refrigerant piping
- **c** VRV direct expansion (DX) indoor unit
- **d** Remote controller in normal mode
- **e** Remote controller in alarm only mode
- **f** Remote controller in supervisor mode (mandatory in some situations)
- **g** Centralised controller (optional)
- **h** Option PCB (optional)

For installation of the remote controller, please refer to the installation and operation manual delivered with the remote controller. Each indoor unit must be connected with a R32 safety system compatible remote controller (e.g. BRC1H52/82* or later type). These remote controllers have implemented safety measures that will warn the user visually and audibly in case of a leak.

For installation of the remote controller, it is mandatory to follow the requirements.

1. Only a safety system compatible remote controller can be used. See technical data sheet for remote controller compatibility (e.g. BRC1H52/82*).
2. Each indoor unit must be connected to a separate remote controller. In case indoor units are operating under group control, it is possible to use only one remote controller per room.
3. The remote controller put in the room served by the indoor unit must be in 'fully functional' or 'alarm only' mode. In case the indoor unit is serving a room other than where it is installed, a remote controller is required in both the installed and served room (some relaxations are possible, see examples below). For details about the different remote controller modes and how to set up, please check the note below or refer to the installation and operation manual delivered with the remote controller.
4. For buildings where sleeping facilities are offered (e.g. hotel), where persons are restricted in their movements (e.g. hospitals), an uncontrolled number of persons is present or buildings where people are not aware of the safety precautions it is mandatory to install one of the following devices at a location with 24-hour monitoring:
   - a supervisor remote controller
   - or a centralised controller. E.g., iTM with external alarm via WAGO module, iTM with built-in alarm, …

Note: The remote controllers with built-in alarm will generate a visible and audible warning. E.g. the BRC1H52/82* remote controllers can generate an alarm of 65 dB (sound pressure, measured at 1 m distance of the alarm). Sound data is available in the technical data sheet of the remote controller. **The alarm should always be 15 dB louder than the background noise of the room.**

A field supply external alarm with a sound output 15 dB louder than the background noise of the room MUST be installed in the following cases:

- The sound output of the remote controller is not sufficient to guarantee the 15 dB difference. This alarm can be connected to the SVS output channel of the outdoor unit or to the optional output PCB of the indoor unit of that specific room. The outdoor SVS will trigger for any R32 leak detected in the complete system. For indoor units, the optional output is only triggered when its own R32 sensor detects a leak. For more information on the SVS output signal, see "16.3 To connect the electrical wiring to the outdoor unit" [▸ 31]. For more information on the optional output PCB of the indoor unit, please refer to the installer and user reference guide of the indoor unit.
- A centralised controller without built-in alarm is used, or the sound output of the centralised controller with built-in alarm is not sufficient to guarantee the 15 dB difference. Please refer to the installation manual of the centralised controller for the correct procedure to install the external alarm.

Note: Depending on the configuration, the remote controller is operable in three possible modes. Each mode offers different controller functionality. For detailed information about setting the operation mode of the remote controller and its function, please refer to the installer and user reference guide of the remote controller.

Mode	Function
Fully functional	The controller is fully functional. All normal functionality is available. **This controller can be master or slave.**
Alarm only	The controller only acts as leak detection alarm (for a single indoor unit). No functionality is available. The remote controller should always be put in the same room as the indoor unit. **This controller can be master or slave.**
Supervisor	The controller only acts as leak detection alarm (for the whole system, i.e. multiple indoor units and their respective controllers). No other functionality is available. The remote controller should be placed at a supervised location. **This remote controller can only be the slave.** **Note:** In order to add a supervisor remote controller to the system, a field setting should be set on both remote controller and outdoor unit.

Note: Incorrect use of remote controllers can result in occurrence of error codes, non-operating system or system that is not compliant to applicable legislation.

Note: Some centralised controllers can also be used as supervisor remote controller. For further details on installation, please refer to the installation manual of the centralised controllers.

Examples

	NOT OK	OK	Case
1	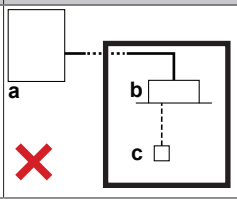	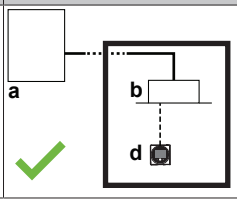	Remote controller is not R32 safety system compatible

	NOT OK	OK	Case
2	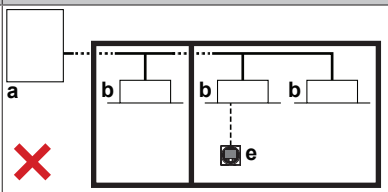	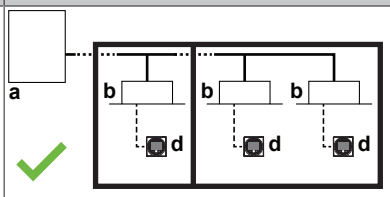	Indoor units without remote controller are not allowed
3	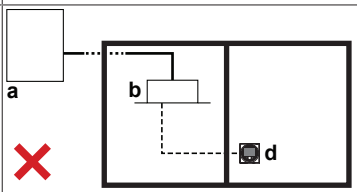	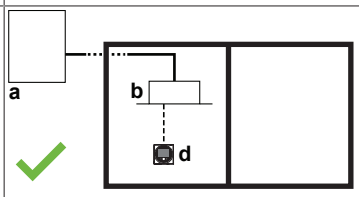	In case of one R32 safety system compatible remote controller, it should be the master and in the same room of the indoor unit.
4	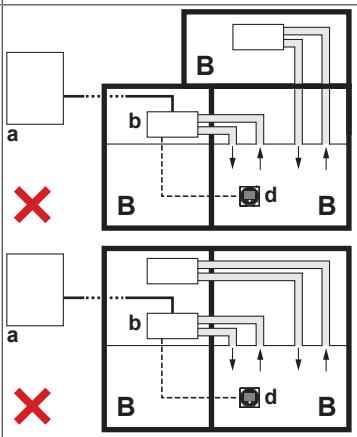	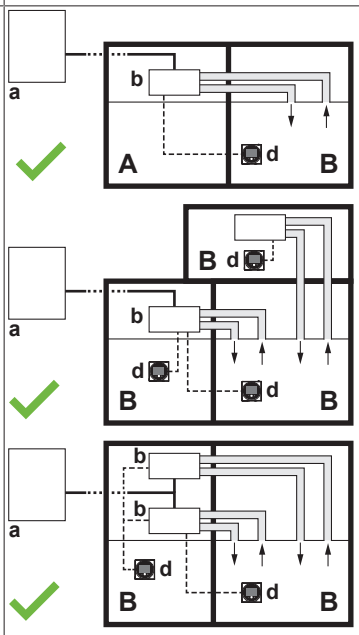	In case a ducted indoor unit is serving a different room than where it is installed, both supply and return air MUST be directly ducted to that room. The room area and remote controller rules MUST be followed only in the served room when a given room is served by only one ducted indoor unit installed in a different room. In all other situations both the room where the ducted unit is installed and the served room(s) need to follow the room area and remote controller rules. **A**: No room area restrictions apply. No remote controller required. **B**: Room area restrictions apply, and installation of remote controller required.
5	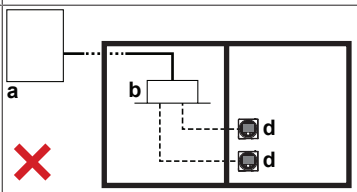	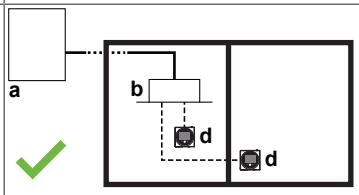	In case of two R32 safety system compatible remote controllers, at least one remote controller should be in the room of the indoor.
6	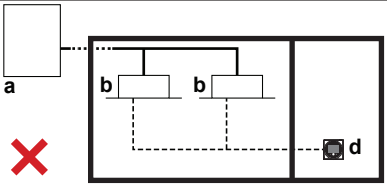	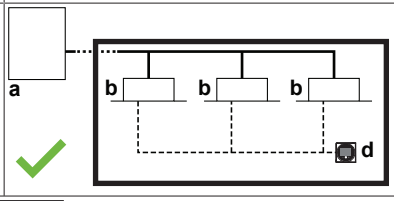	Group control is allowed up to a maximum of 5 indoor units connected to different ports or connected to the same port. At least one R32 safety system compatible remote controller should be in the room of the indoors.
7	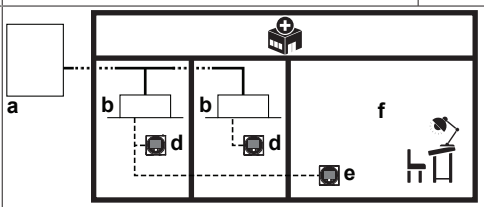		In particular situations it is mandatory to install a remote controller at a supervised location. In room: master remote controller in fully functional OR alarm only. In supervisor room: supervisor remote controller.

- **a** Outdoor unit
- **b** Indoor unit
- **c** Remote controller NOT compatible with R32 safety system
- **d** Remote controller compatible with R32 safety system
- **e** Remote controller in supervisor mode
- **f** Supervisor room
- **g** Ducts (supply and return air)

12.3 To determine the charge limit

Step 1 – In order to derive the total refrigerant charge limit in the system, determine the area:

- of the rooms where an indoor unit is installed.
- AND of the rooms served by a ducted indoor unit installed in a different room.

The room area can be determined by projecting the walls, doors and partitions to the floor and calculate the enclosed area. The area of the smallest room being served by the system is used in the next step to determine the maximum allowable total charge of the system.

Spaces connected by only false ceilings, ductwork, or similar connections shall not be considered a single space.

If the partition between two rooms on the same floor meets certain requirements, then the rooms are considered as one room and the areas of the rooms may be added up. In this way it is possible to increase the A_{min} value used to calculate the maximum allowed charge.

One of the following two requirements must be met to add up room areas:

- Rooms on the same floor that are connected with a permanent opening that extends to the floor and is intended for people to walk through can be considered as one room.
- Rooms on the same floor connected with openings that fulfil following requirements can be considered as a single room. The opening must consist out of two parts to allow for air circulation.

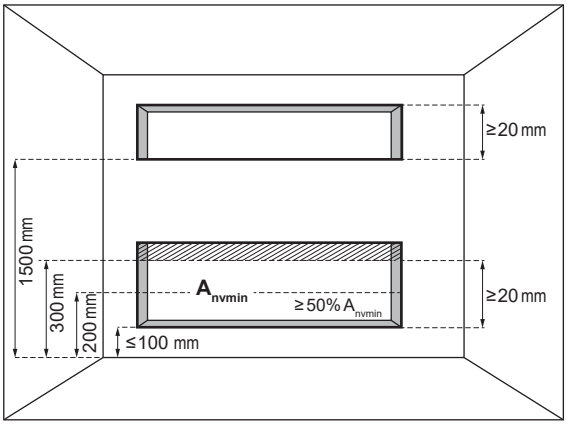

A_{nvmin} Minimal natural ventilation area

For the lower opening:

- It is not an opening to the outside
- The opening cannot be closed
- The opening must be ≥0.012 m² (A_{nvmin})
- The area of any openings above 300 mm from the floor does not count when determining A_{nvmin}
- At least 50% of A_{nvmin} is less than 200 mm above the floor
- The bottom of the lower opening is ≤100 mm from the floor
- The height of the opening is ≥20 mm

For the upper opening:

- It is not an opening to the outside
- The opening cannot be closed
- The opening must be ≥0.006 m² (50% of A_{nvmin})
- The bottom of the upper opening must be ≥1500 mm above the floor
- The height of the opening is ≥20 mm

Note: The requirement for the upper opening can be met by false ceilings, ventilation ducts or similar arrangements that provide an airflow path between the connected rooms.

Step 2 – Use the graph or table (see "Figure 4" [▸ 3] at the beginning of this manual) to determine the total refrigerant charge limit in the system for each indoor unit AND for each room served by a ducted indoor unit.

→ Legend for "Figure 4" [▸ 3]:

A	Area of the room being served
m	Total refrigerant charge limit in the system
(a)	All other floors (=All other floors)
(b)	Lowest underground floor (=Lowest underground floor)
(c)	Effective installation height (=Effective installation height)

Determine the value for both the lowest underground floor AND the other floors.

The total refrigerant charge limit depends on the effective installation height, measured between:

- the bottom side of the indoor unit and the lowest point of the floor, in case the indoor unit is installed in the same room.
- the bottom of the duct opening and the lowest point of the floor, for rooms served by a ducted indoor unit installed in a different room.

Note: If the height for your installation is not shown, use the closest lower height value in the table. E.g. for an installation height of 2.7 m, use the value corresponding with height 2.5 m of the table.

Refer to the databook for a more detailed table.

NOTICE

Indoor units and the bottom of duct openings cannot be installed lower than 1.8 m from the lowest point of the floor, except for floor standing indoor units (e.g. FXNA)

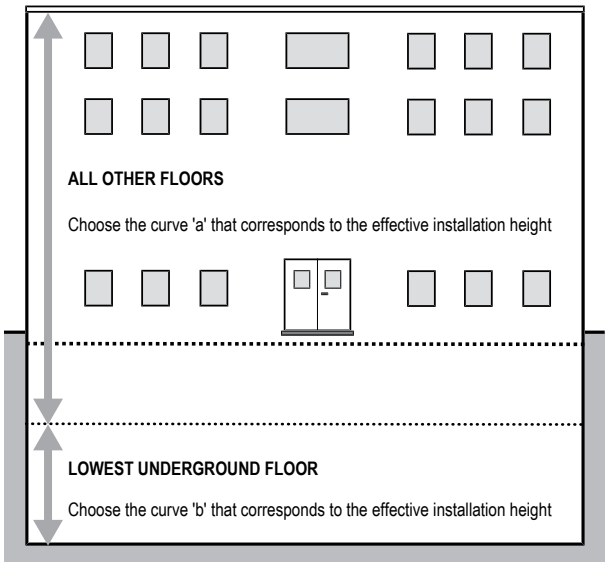

Note: The derived charge value should be rounded down.

Step 3 – Determine the total amount of refrigerant in the system:

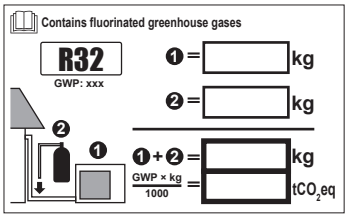

Total charge=Factory charge ❶+additional charge ❷=3.4 kg+R[(a)]

[(a)] The R value (additional refrigerant to be charged) is calculated in "15.2 To determine the additional refrigerant amount" [▸ 29].

Step 4 – The total refrigerant charge in the system **MUST be less than** the lowest value of the refrigerant charge limit for each room where an indoor unit is installed or that is served by a ducted indoor unit installed in a different room. If NOT, change the installation (see choices below) and repeat all of the above steps.

1. Increase the area of the room restricting the total charge.

OR

2. Decrease the piping length by changing the system layout.

OR

3. Increase the installation height of the unit or the duct.

OR

4. Add additional countermeasures as described in applicable legislation.

   SVS output or optional output PCB for indoor unit can be used to connect and activate the additional countermeasures (e.g. mechanical ventilation). For more information, see "16.4 To connect the external outputs" [▶ 33].

OR

5. Fine-tune system with more detailed calculations in VRV Xpress.

NOTICE

The total refrigerant charge amount in the system MUST always be lower than the number of connected indoor units ×15.96 [kg], with a maximum of 63.84 kg.

E.g. In a system with one indoor unit, the maximum refrigerant charge amount is: 1×15.96=15.96 kg.

Example 1:

	Room			
	A	B	C	D
Area [m²]	20	30	50	50
Installation height [m]	3.5	2.2	1.8	2.5
Lowest underground floor	—	—	●	●
Other floors	●	●	—	—
Charge limit [kg]	15.7	**15.1**	16.9	19.2
System charge limit [kg]	15.1			
System charge [kg]	16.0			
Judgement	✕			

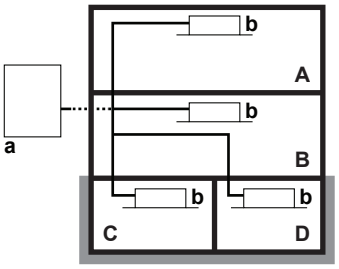

a Outdoor unit
b Indoor unit
A/B/C/D Room A/B/C/D

Example 2:

	Room			
	A	B	C	D
Area [m²]	10	20	10	20
Installation height [m]	3.0	2.2	3.0	2.2
Lowest underground floor	—	—	●	●
Other floors	●	●	—	—
Charge limit [kg]	9.0	11.8	**5.4**	6.8
System charge limit [kg]	5.4			
System charge [kg]	5.0			
Judgement	✓			

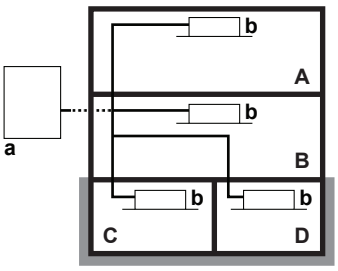

a Outdoor unit
b Indoor unit
A/B/C/D Room A/B/C/D

Example 3:

	Room	
	A	B
Area [m²]	20	30
Installation height [m]	2.5	2.5
Lowest underground floor	—	—
Other floors	●	●
Charge limit [kg]	—	**16.5**
System charge limit [kg]	16.5	
System charge [kg]	14.0	
Judgement	✓	

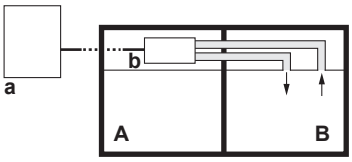

a Outdoor unit
b Indoor unit
A/B Room A/B

Example 4:

	Room	
	A	B
Area [m²]	8	20
Installation height [m]	2.5	2.5
Lowest underground floor	—	—
Other floors	●	●
Charge limit [kg]	**6.0**	12.7
System charge limit [kg]	6.0	
System charge [kg]	12.0	
Judgement	✕	

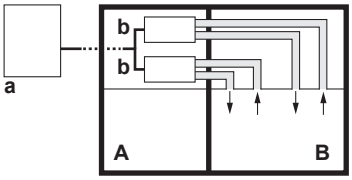

a Outdoor unit
b Indoor unit
A/B Room A/B

Flow chart

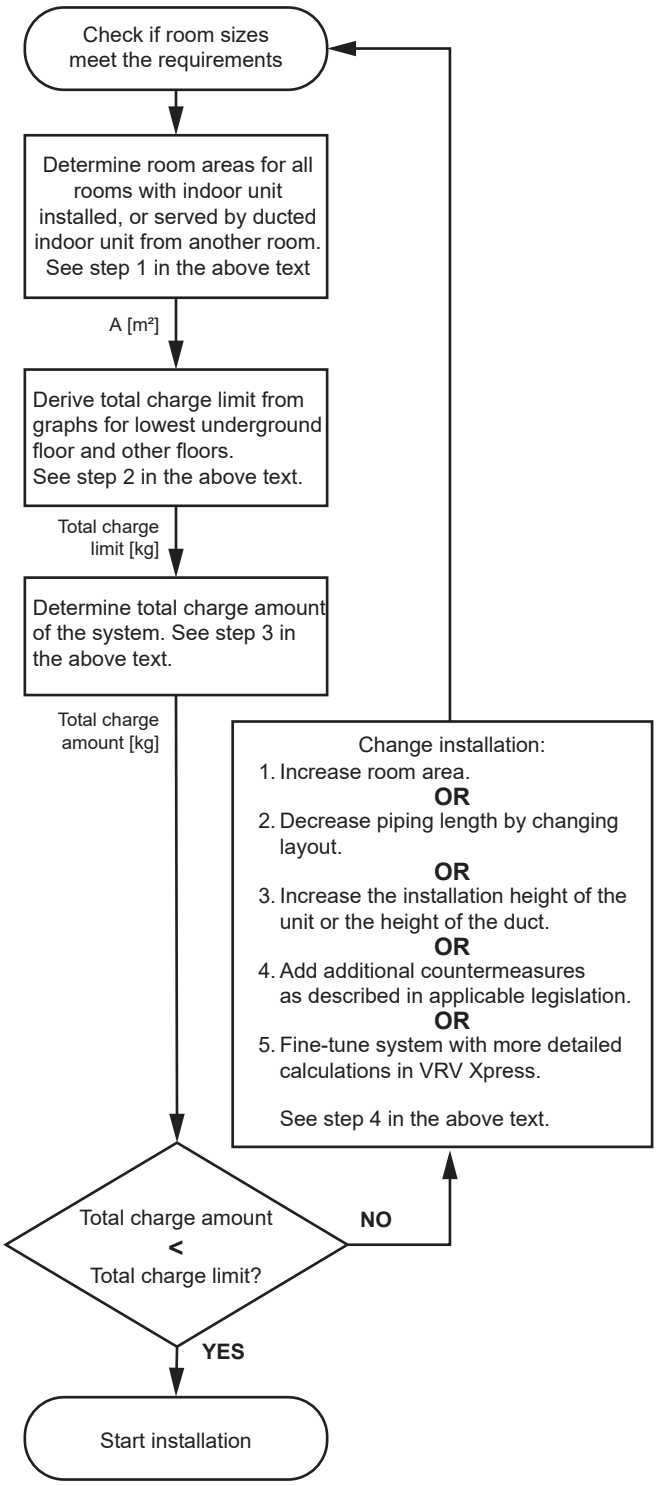

13 Unit installation

WARNING

The installation MUST comply with the requirements that apply to this R32 equipment. For more information, see "2.1 Instructions for equipment using R32 refrigerant" [▸ 6].

13.1 Preparing the installation site

WARNING

The appliance shall be stored in a room without continuously operating ignition sources (example: open flames, an operating gas appliance or an operating electric heater).

13.1.1 Installation site requirements of the outdoor unit

Mind the spacing guidelines. See the "Technical data" chapter, and the figures on the inside of the front cover.

INFORMATION

The sound pressure level is less than 70 dBA.

CAUTION

Appliance is NOT accessible to the general public. Install it in a secured area, protected from easy access.

This unit is suitable for installation in a commercial and light industrial environment.

- Make sure the area is well ventilated. Do NOT block any ventilation openings.

The outdoor unit is designed for outdoor installation only, and for the following ambient temperatures:

Heating	–20~21°C DB –20~15.5°C WB
Cooling	–5~46°C DB

Note: For indoor installation of the outdoor unit, check the applicable legislation.

13.1.2 Additional installation site requirements of the outdoor unit in cold climates

Protect the outdoor unit against direct snowfall and take care that the outdoor unit is NEVER snowed up.

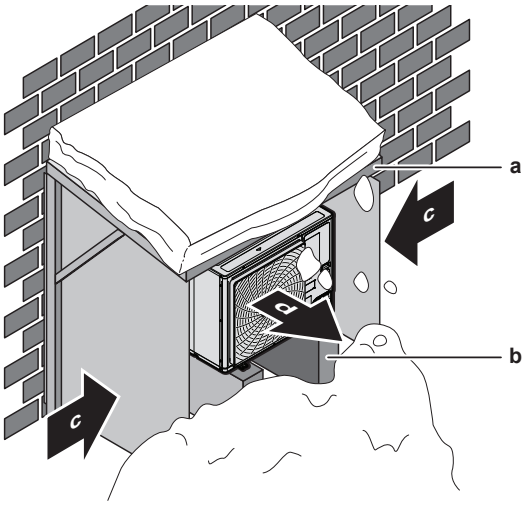

a Snow cover or shed
b Pedestal (minimum height=150 mm)
c Prevailing wind direction
d Air outlet

Snow might build up and freeze between the heat exchanger and the casing of the unit. This might decrease the operating efficiency. For instructions on how to prevent this (after mounting of the unit), see "13.3.3 To provide drainage" [▸ 23].

13.2 Opening and closing the unit

13.2.1 To open the outdoor unit

DANGER: RISK OF ELECTROCUTION

DANGER: RISK OF BURNING/SCALDING

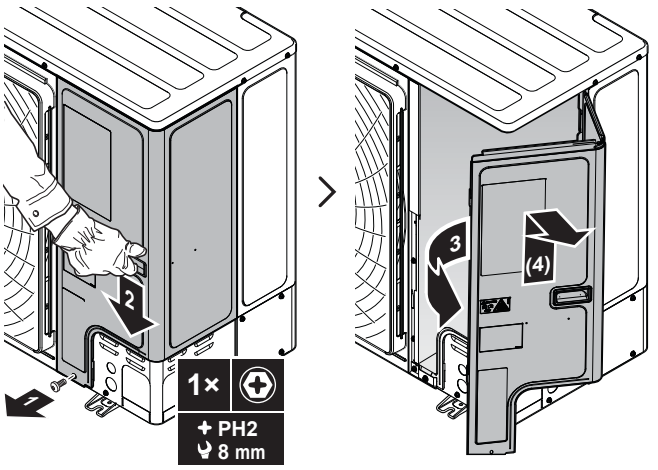

13.2.2 To close the outdoor unit

NOTICE

When closing the outdoor unit cover, make sure that the tightening torque does NOT exceed 4.1 N•m.

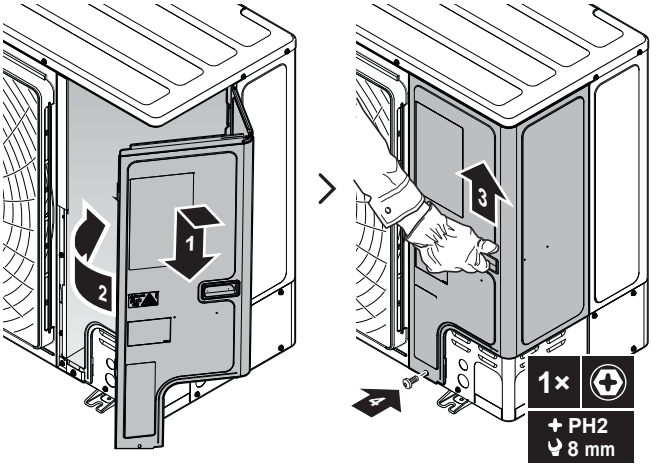

13.3 Mounting the outdoor unit

13.3.1 To provide the installation structure

Prepare 4 sets of anchor bolts, nuts and washers (field supply) as follows:

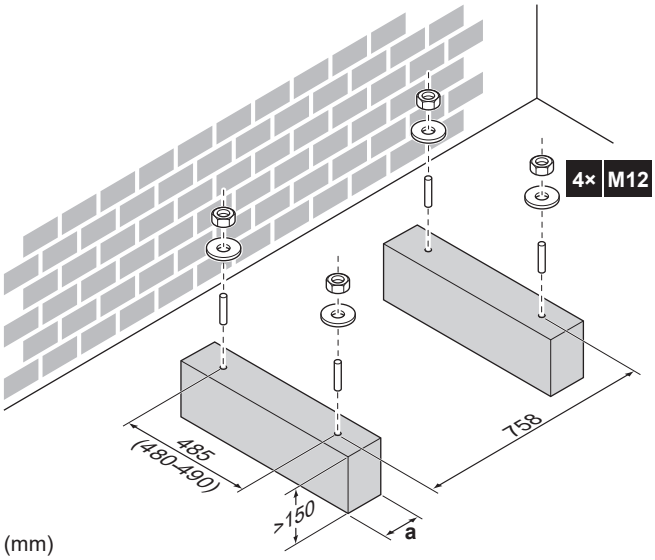

(mm)

a Make sure not to cover the drain holes of the bottom plate of the unit.

INFORMATION

The recommended height of the upper protruding part of the bolts is 20 mm.

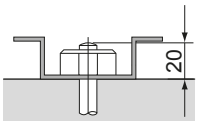

NOTICE

Fix the outdoor unit to the foundation bolts using nuts with resin washers (a). If the coating on the fastening area is stripped off, the metal can rust easily.

13.3.2 To install the outdoor unit

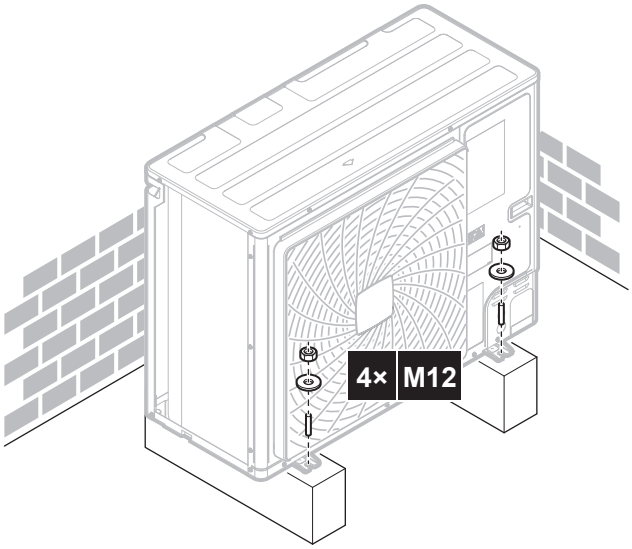

13.3.3 To provide drainage

INFORMATION

If necessary, you can use a drain pan (field supply) to prevent drain water from dripping.

NOTICE

If the unit CANNOT be installed fully level, always make sure that the inclination is towards the backside of the unit. This is required to guarantee proper drainage.

NOTICE

If drain holes of the outdoor unit are covered by a mounting base or by floor surface, raise the unit to provide a free space of more than 150 mm under the outdoor unit.

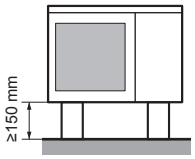

Drain holes (dimensions in mm)

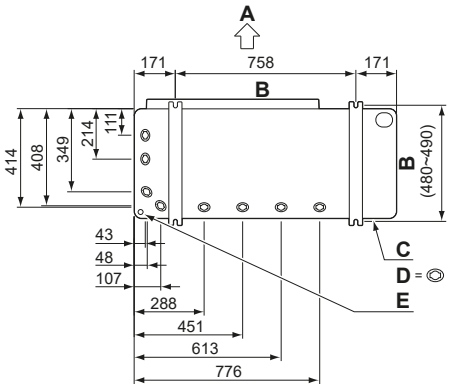

A Discharge side
B Distance between anchor points
C Bottom frame
D Drain holes
E Knockout hole for snow

Snow

In regions with snowfall, snow might build up and freeze between the heat exchanger and the casing of the unit. This might decrease the operating efficiency.

INFORMATION

It is recommended to install the optional bottom plate heater (EKBPH250D7) when the unit is installed in cold climates.

13.3.4 To prevent the outdoor unit from falling over

In case the unit is installed in places where strong wind can tilt the unit, take following measure:

1. Prepare 2 cables as indicated in the following illustration (field supply).
2. Place the 2 cables over the outdoor unit.
3. Insert a rubber sheet between the cables and the outdoor unit to prevent the cables from scratching the paint (field supply).
4. Attach the ends of the cables.
5. Tighten the cables.

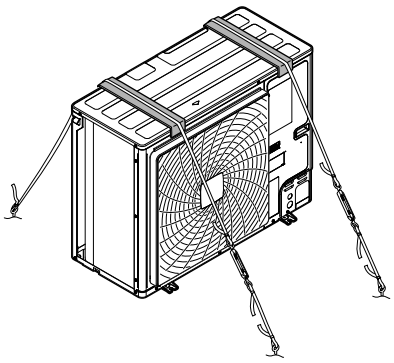

14 Piping installation

CAUTION

See "2 Specific installer safety instructions" [▶ 5] to make sure this installation complies with all safety regulations.

14.1 Preparing refrigerant piping

In case of replacement of an R410A unit, also see chapter "14.3 Piping details in case of replacement" [▶ 26] for important information.

14.1.1 Refrigerant piping requirements

NOTICE

The piping and other pressure-containing parts shall be suitable for refrigerant. Use phosphoric acid deoxidised seamless copper for refrigerant piping.

- Foreign materials inside pipes (including oils for fabrication) must be ≤30 mg/10 m.

14.1.2 Refrigerant piping material

Piping material

Phosphoric acid deoxidised seamless copper

Flare connections

Only use annealed material.

Piping temper grade and thickness

Outer diameter (Ø)	Temper grade	Thickness (t)[a]	
6.4 mm (1/4") 9.5 mm (3/8") 12.7 mm (1/2")	Annealed (O)	≥0.80 mm	
15.9 mm (5/8")	Annealed (O)	≥0.99 mm	
19.1 mm (3/4")	Half hard (1/2H)	≥0.80 mm	

[a] Depending on the applicable legislation and the maximum working pressure of the unit (see "PS High" on the unit name plate), larger piping thickness might be required.

14.1.3 Refrigerant piping insulation

- Insulation thickness:

Ambient temperature	Humidity	Minimum thickness
≤30°C	75% to 80% RH	15 mm
>30°C	≥80% RH	20 mm

14.1.4 To select the piping size

Determine the proper size using the following tables and reference figure (only for indication).

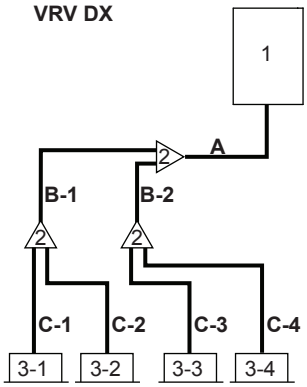

1	Outdoor unit
2	Refrigerant branch kits
3-1~3-4	VRV DX indoor units
A	Piping between outdoor unit and (first) refrigerant branch kit
B-1, B-2	Piping between refrigerant branch kits
C-1~C-4	Piping between refrigerant branch kit and indoor unit

In case the required pipe sizes (inch sizes) are not available, it is also allowed to use other diameters (mm sizes), taken the following into account:

- Select the pipe size nearest to the required size.
- Use the suitable adapters for the changeover from inch to mm pipes (field supply).
- The additional refrigerant calculation has to be adjusted as mentioned in "15.2 To determine the additional refrigerant amount" [▸ 29].

A: Piping between outdoor unit and (first) refrigerant branch kit

When the equivalent pipe length between outdoor unit and the furthest indoor unit is 90 m or more (b+d), the size of the main gas pipe (b) must be increased (size-up). If the recommended gas pipe (size-up) is not available, you must use the standard size (which might result in a small capacity decrease).

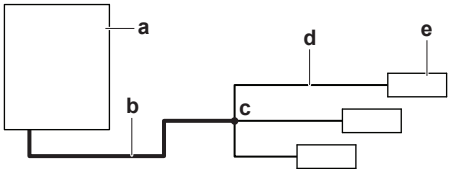

a	Outdoor unit
b	Main gas pipe (increase piping size if length b+d ≥ 90 m)
c	First refrigerant branch kit
d	Piping between indoor unit and first refrigerant branch kit
e	Furthest indoor unit

Outdoor unit capacity type (HP)	Piping outer diameter size [mm]		
	Gas pipe		Liquid pipe
	Standard	Size-up (only 'b')	
4+5+6	15.9	19.1	9.5

B: Piping between refrigerant branch kits

Choose from the following table in accordance with the indoor unit total capacity type, connected downstream. Do not let the connection piping exceed the refrigerant piping size chosen by the general system model name.

Indoor unit capacity index	Piping outer diameter size [mm]	
	Gas pipe	Liquid pipe
0≤x≤182	15.9	9.5

Example: Downstream capacity for B-1 = capacity index of unit 3-1 + capacity index of unit 3-2

C: Piping between refrigerant branch kit and indoor unit

Use the same diameters as the connections (liquid, gas) on the indoor units. The diameters of the indoor units are as follows:

Indoor unit capacity index	Piping outer diameter size [mm]	
	Gas pipe	Liquid pipe
10~32	9.5	6.4
40~80	12.7	6.4
100~140	15.9	9.5

14.1.5 To select refrigerant branch kits

For piping example, refer to "14.1.4 To select the piping size" [▸ 24].

Refnet joint at first branch (counting from outdoor unit)

When using refnet joints at the first branch counted from the outdoor unit side, choose from the following table in accordance with the capacity of the outdoor unit. **Example:** Refnet joint A→B-1.

Outdoor unit capacity type (HP)	Refrigerant branch kit
4~6	KHRQ22M20TA

Refnet joints at other branches

For refnet joints other than the first branch, select the proper branch kit model based on the total capacity index of all indoor units connected after the refrigerant branch. **Example:** Refnet joint B-1→C-1.

Indoor unit capacity index	Refrigerant branch kit
<182	KHRQ22M20TA

Refnet headers

Concerning refnet headers, choose from the following table in accordance with the total capacity of all the indoor units connected below the refnet header.

Indoor unit capacity index	Refrigerant branch kit
<182	KHRQ22M29H

INFORMATION

Maximum 8 branches can be connected to a header.

14.2 Connecting the refrigerant piping

DANGER: RISK OF BURNING/SCALDING

NOTICE

Check the unit and field piping sizes to determine the required fittings.

14.2.1 To remove the pinched pipes

WARNING

Any gas or oil remaining inside the stop valve may blow off the pinched piping.

Failure to observe the instructions in procedure below properly may result in property damage or personal injury, which may be serious depending on the circumstances.

Use the following procedure to remove the pinched piping:

1 Make sure that the stop valves are fully closed.

2 Connect the vacuuming/recovery unit through a manifold to the service port of all stop valves.

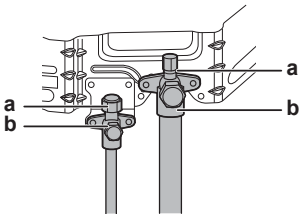

a Service port
b Stop valve

3 Recover gas and oil from the pinched piping by using a recovery unit.

CAUTION

Do NOT vent gases into the atmosphere.

4 When all gas and oil is recovered from the pinched piping, disconnect the charge hose and close the service ports.

5 Cut off the lower part of the gas and liquid stop valve pipes along the black line. Use an appropriate tool (e.g. a pipe cutter).

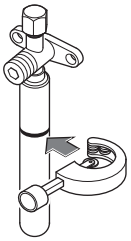

WARNING

NEVER remove the pinched piping by brazing.

Any gas or oil remaining inside the stop valve may blow off the pinched piping.

6 Wait until all oil has dripped out before continuing with the connection of the field piping in case the recovery was not complete.

14.2.2 To connect the refrigerant piping to the outdoor unit

- **Piping length.** Keep field piping as short as possible.
- **Piping protection.** Protect the field piping against physical damage.

NOTICE

- Be sure to use the supplied accessory pipes when carrying out piping work in the field.
- Be sure that the field installed piping does not touch other pipes, the bottom panel or side panel. Especially for the bottom and side connection, be sure to protect the piping with suitable insulation, to prevent it from coming into contact with the casing.

1 Do the following:

- Remove the service cover (a) with screw (b).
- Remove the piping intake plate (c) with screws (d).

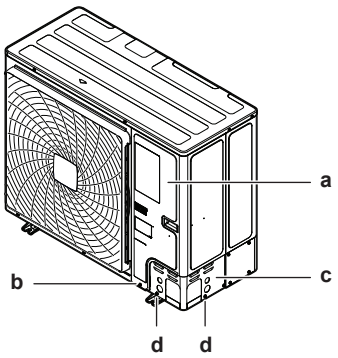

2 Choose a piping route (a, b, c or d).

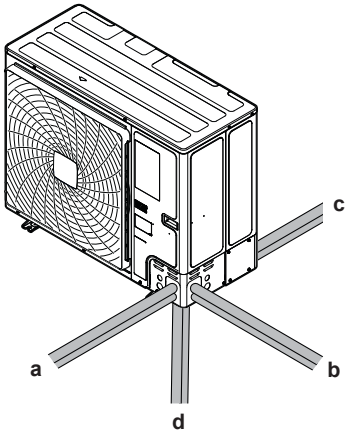

a Front
b Side
c Rear
d Bottom

INFORMATION

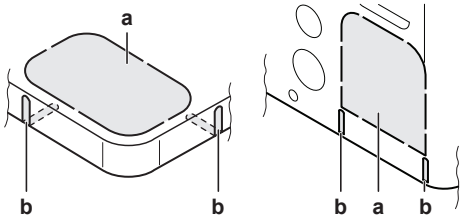

- Punch out the knockout (a) in the bottom plate or cover plate by tapping on the attachment points with a flat head screwdriver and a hammer.
- Optionally, cut out the slits (b) with a metal saw.

NOTICE

Precautions when making knockout holes:

- Avoid damaging the casing and underlying piping.
- After making the knockout holes, we recommend to remove the burrs and paint the edges and areas around the edges using repair paint to prevent rusting.
- When passing electrical wiring through the knockout holes, wrap the wiring with protective tape to prevent damage.

3 Do the following:

- Connect the accessory liquid pipe (a) to the liquid stop valve (brazing).
- Connect the accessory gas pipe (b) to the gas stop valve (brazing).

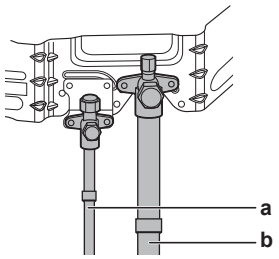

NOTICE

When brazing: First braze the liquid side piping, then the gas side piping. Enter the filler rod from the front of the unit and the brazing torch from the right side to braze with the flame pointing outside. Avoid heating the compressor sound insulation and other piping.

Wrap both stop valves in a wet cloth in order to protect the valve internals from overheating.

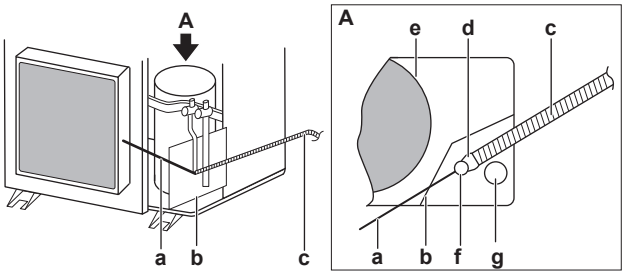

- **a** Filler rod
- **b** Fire resistant plate
- **c** Torch
- **d** Flame
- **e** Compressor sound insulation
- **f** Liquid side piping
- **g** Gas side piping

4 Connect the field piping to the accessory pipes using the accessory bend pipes (brazing). Mind the orientation of the bends.

NOTICE

Always protect the surrounding surfaces (e.g. wiring, insulation foam, …) from heat when brazing.

NOTICE

Make sure to open the stop valves after installing the refrigerant piping and performing vacuum drying. Running the system with the stop valves closed may break the compressor.

14.2.3 To connect the refrigerant branching kit

For installation of the refrigerant branching kit, refer to the installation manual delivered with the kit.

- Mount the refnet joint so that it branches either horizontally or vertically.
- Mount the refnet header so that it branches horizontally.

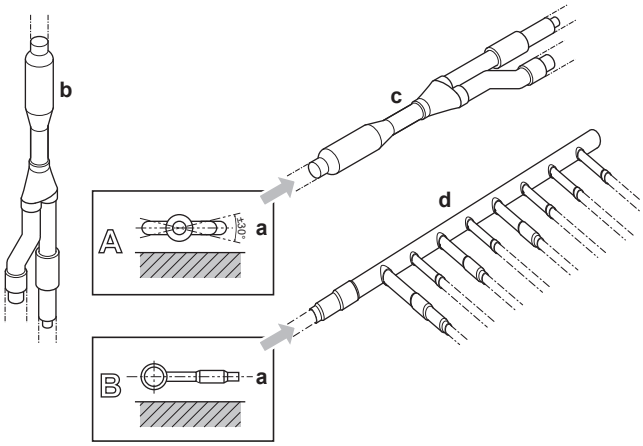

- **a** Horizontal surface
- **b** Refnet joint mounted vertically
- **c** Refnet joint mounted horizontally
- **d** Header

14.3 Piping details in case of replacement

NOTICE

Make sure field setting [2-49] "New installation or replacement installation" is correctly set.

Due to the flammability of R32, replacing a VRV IV (R410A) system with this unit also requires replacement of the indoor units and controllers (see "12 Special requirements for R32 units" [▶ 16]).

NOTICE

In case a RA DX unit (residential air conditioning) is present, it MUST be replaced with a VRV DX unit of equivalent capacity.

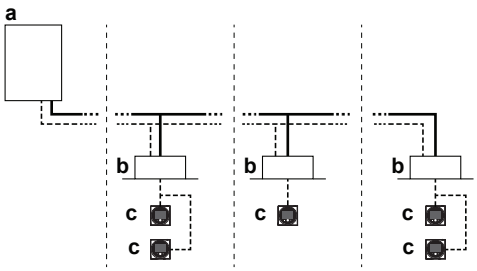

Replace:
- **a** Heat pump outdoor unit
- **b** VRV direct expansion (DX) indoor unit
- **c** Remote controller

Reuse:
- Refrigerant piping
- Wiring

General info about R410A piping

This unit can replace VRV IV systems that use R410A refrigerant. The change to R32 requires adjustments to the existing piping:

- R410A piping is usually larger than R32 piping, so connection mismatches can occur. Use reducers or expanders as needed.

NOTICE

Check the unit and field piping sizes to determine the required fittings.

- Piping cleanliness: clean existing piping if necessary to remove residual R410A oil before operating with R32.

NOTICE

Cleaning or replacement of the air handling unit heat exchangers is mandatory for reuse of air handling units.

Requirements for cleaning field piping

In case the unit is used as a replacement, use the following flow chart to check if the existing piping can be reused, and if further actions need to be taken:

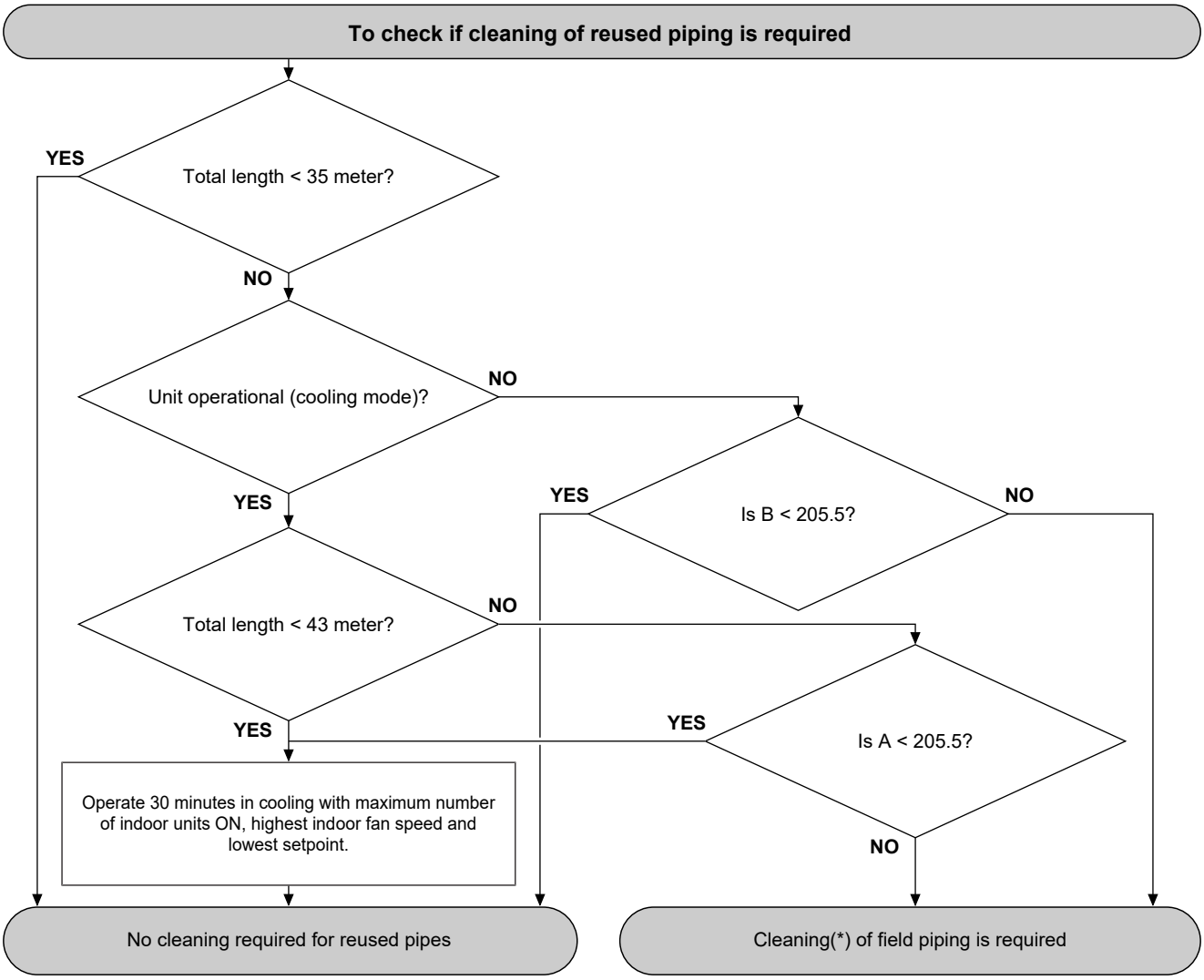

* If not possible to clean field piping, piping will need to be partially or totally replaced to meet flowchart conditions (see example below).

A/B Use the formulas below to calculate the coefficient A or B.

Formulas

$A=[(X_1\times\mathbf{Ø22.2}\times5.6)+(X_2\times\mathbf{Ø19.1}\times4.76)+(X_3\times\mathbf{Ø15.9}\times3.79)+(X_4\times\mathbf{Ø12.7}\times3.02)+(X_5\times\mathbf{Ø9.5}\times2.15)]$

$B=[(X_1\times\mathbf{Ø22.2}\times7.44)+(X_2\times\mathbf{Ø19.1}\times5.84)+(X_3\times\mathbf{Ø15.9}\times4.3)+(X_4\times\mathbf{Ø12.7}\times3.34)+(X_5\times\mathbf{Ø9.5}\times3.42)]$

$\mathbf{X_{1...5}}$ Total length [m] of gas piping size at **Øa**

Example

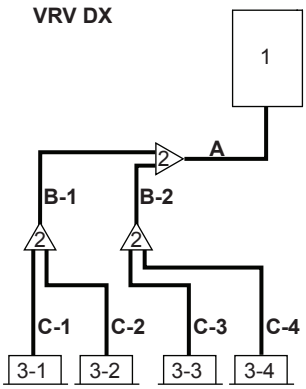

1 Outdoor unit
2 Refrigerant branch kits
3-1~3-4 VRV DX indoor units

A Piping between outdoor unit and (first) refrigerant branch kit
B-1, B-2 Piping between refrigerant branch kits
C-1~C-4 Piping between refrigerant branch kit and indoor unit

The unit is not operational for this example, so, following the flow chart, coefficient 'B' is calculated: $B=[(X_1\times\mathbf{Ø22.2}\times7.44)+(X_2\times\mathbf{Ø19.1}\times5.84)+(X_3\times\mathbf{Ø15.9}\times4.3)+(X_4\times\mathbf{Ø12.7}\times3.34)+(X_5\times\mathbf{Ø9.5}\times3.42)]$

For this example, lengths and diameters are as follows, where 'B' is calculated for every pipe:

Reused pipe	Gas pipe diameter	Gas pipe length	Formula	Value B
A	19.1 mm	10 m	10 m × 5.84	58.40
B-1	15.9 mm	5 m	5 m × 4.3	21.50
B-2	15.9 mm	5 m	5 m × 4.3	21.50
C-1	12.7 mm	15 m	15 m × 3.34	50.10
C-2	12.7 mm	15 m	15 m × 3.34	50.10
C-3	12.7 mm	10 m	10 m × 3.34	33.40
C-4	12.7 mm	5 m	5 m × 3.34	16.70
Total		**65 m**		**251.70**

The total B > 205.5 → cleaning of the piping is needed.

In case it is impossible to clean the piping, it would be sufficient to replace the gas and liquid piping of the section 'A'.

After replacing the 'A' section piping by new piping, coefficient 'B' would become:

Reused pipe	Gas pipe diameter	Gas pipe length	Formula	Value B
A	~~19.1 mm~~	~~10 m~~	~~10 m × 5.84~~	~~58.40~~
(remove A from calculation)				
B-1	15.9 mm	5 m	5 m × 4.3	21.50
B-2	15.9 mm	5 m	5 m × 4.3	21.50
C-1	12.7 mm	15 m	15 m × 3.34	50.10
C-2	12.7 mm	15 m	15 m × 3.34	50.10
C-3	12.7 mm	10 m	10 m × 3.34	33.40
C-4	12.7 mm	5 m	5 m × 3.34	16.70
Total		**55 m**		**193.3**

The total B < 205.5 → cleaning of the piping is NOT needed.

14.4 Checking the refrigerant piping

14.4.1 Checking refrigerant piping: Setup

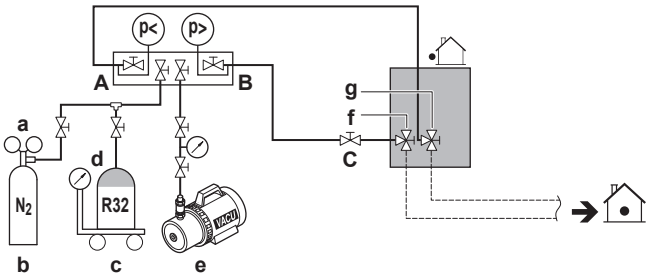

- **a** Pressure reducing valve
- **b** Nitrogen
- **c** Weighing scales
- **d** Refrigerant R32 tank (siphon system)
- **e** Vacuum pump
- **f** Liquid line stop valve
- **g** Gas line stop valve
- **A** Valve A
- **B** Valve B
- **C** Valve C

Valve	Status
Valve A	Open
Valve B	Open
Valve C	Open
Liquid line stop valve	Close
Gas line stop valve	Close

NOTICE

Indoor units should also be leak and vacuum tested. Keep any possible (field supplied) field piping valves open as well.

14.4.2 To perform a leak test

Vacuum leak test

1. Evacuate the system from the liquid and gas piping to a gauge pressure of –100.7 kPa (–1.007 bar) for more than 2 hours.
2. Once reached, turn off the vacuum pump and check that the pressure does not rise for at least 1 minute.
3. Should the pressure rise, the system may either contain moisture (see vacuum drying below) or have leaks.

Pressure leak test

1. Break the vacuum by pressurising with nitrogen gas to a minimum gauge pressure of 0.2 MPa (2 bar). Never set the gauge pressure higher than the maximum working pressure of the unit, i.e. 3.52 MPa (35.2 bar).
2. Test for leaks by applying a bubble test solution to all piping connections.
3. Discharge all nitrogen gas.

NOTICE

ALWAYS use a recommended bubble test solution from your wholesaler.

NEVER use soap water:

- Soap water may cause cracking of components, such as flare nuts or stop valve caps.
- Soap water may contain salt, which absorbs moisture that will freeze when the piping gets cold.
- Soap water contains ammonia which may lead to corrosion of flared joints (between the brass flare nut and the copper flare).

14.4.3 To perform vacuum drying

To remove all moisture from the system, proceed as follows:

1. Evacuate the system for at least two hours to a target vacuum of –100.7 kPa (–1.007 bar)(5 Torr absolute).
2. Check that, with the vacuum pump turned off, the target vacuum is maintained for at least one hour.
3. Should you fail to reach the target vacuum within 2 hours or maintain the vacuum for one hour, the system may contain too much moisture. In that case, break the vacuum by pressurising with nitrogen gas to a gauge pressure of 0.05 MPa (0.5 bar) and repeat steps 1 to 3 until all moisture has been removed.
4. Depending on whether you want to immediately charge refrigerant through the refrigerant charge port or first pre-charge a portion of refrigerant through the liquid line, either open the outdoor unit stop valves, or keep them closed. See "15.3 To charge refrigerant" [▸ 29] for more information.

14.4.4 To check for leaks after charging refrigerant

After charging refrigerant in the system an additional leak test must be performed. Refer to "15.6 To check refrigerant piping joints for leaks after charging refrigerant" [▸ 31].

15 Charging refrigerant

15.1 Precautions when charging refrigerant

WARNING

- Only use R32 as refrigerant. Other substances may cause explosions and accidents.
- R32 contains fluorinated greenhouse gases. Its global warming potential (GWP) value is 675. Do NOT vent these gases into the atmosphere.
- When charging refrigerant, ALWAYS use protective gloves and safety glasses.

NOTICE

If the power of some units is turned off, the charging procedure cannot be finished properly.

NOTICE

Turn ON the power 6 hours before operation in order to have power running to the crankcase heater and to protect the compressor.

NOTICE

If operation is performed within 12 minutes after the indoor and outdoor unit(s) are powered on, the compressor will not operate before the communication is established in a correct way between outdoor unit(s) and indoor unit(s).

NOTICE

Before starting charging procedures, check if the 7-segment display indication of the outdoor unit A1P PCB is as normal (see "18.1.4 To access mode 1 or 2" [▶ 36]). If a malfunction code is present, see "20.1 Solving problems based on error codes" [▶ 40].

NOTICE

Make sure the connected indoor unit(s) are recognised (see setting [1-10] in "18.1.7 Mode 1: monitoring settings" [▶ 37]).

NOTICE

Close the front panel before any refrigerant charge operation is executed. Without the front panel attached the unit cannot judge correctly whether it is operating properly or not.

NOTICE

In case of maintenance and the system (outdoor unit+field piping+indoor unit(s)) does not contain any refrigerant any more (e.g., after refrigerant reclaim operation), the unit has to be charged with its original amount of refrigerant (refer to the nameplate on the unit) and the determined additional refrigerant amount.

NOTICE

- Ensure that contamination of different refrigerants does not occur when using charging equipment.
- Charging hoses or lines shall be as short as possible to minimise the amount of refrigerant contained in them.
- Cylinders shall be kept in an appropriate position according to the instructions.
- Ensure that the refrigerating system is earthed prior to charging the system with refrigerant. See "16.3 To connect the electrical wiring to the outdoor unit" [▶ 31].
- Label the system when charging is complete.
- Extreme care shall be taken not to overfill the refrigerating system.

NOTICE

Prior to charging the system, it shall be pressure tested with the appropriate purging gas. The system shall be leak tested on completion of charging but prior to commissioning. A follow up leak test shall be carried out prior to leaving the site.

15.2 To determine the additional refrigerant amount

WARNING

The maximum allowable total refrigerant amount is determined based on the smallest room being served by the system.

See "12.2 System layout requirements" [▶ 16] to determine the maximum allowable total refrigerant amount.

INFORMATION

For replacement installations, refer to the original project installation details for liquid piping length and diameter information (VRV Xpress).

INFORMATION

For final charge adjustment in a test laboratory, contact your dealer.

INFORMATION

Note down the amount of additional refrigerant that is calculated here, for later use on the additional refrigerant charge label. See "15.5 To fix the fluorinated greenhouse gases label" [▶ 30].

Formula:

$R=[(X_1 \times \mathbf{Ø9.5}) \times 0.053 + (X_2 \times \mathbf{Ø6.4}) \times 0.020]$

- **R** Additional refrigerant to be charged [kg] (rounded off to one decimal place)
- **$X_{1...4}$** Total length [m] of liquid piping size at **Øa**

Metric piping. When using metric piping, replace the weight factors in the formula by the ones from the following table:

Inch piping		Metric piping	
Piping	**Weight factor**	**Piping**	**Weight factor**
Ø6.4 mm	0.020	Ø6 mm	0.016
Ø9.5 mm	0.053	Ø10 mm	0.058

15.3 To charge refrigerant

To speed up the refrigerant charging process, it is in case of larger systems recommended to first pre-charge a portion of refrigerant through the liquid line before proceeding with the manual charging. It can be skipped, but charging will take longer then.

Pre-charging refrigerant

Pre-charging can be done without compressor operation, by connecting the refrigerant bottle to the service port of the liquid stop valve.

1 Connect as shown. Make sure that all outdoor unit stop valves, as well as valve A are closed.

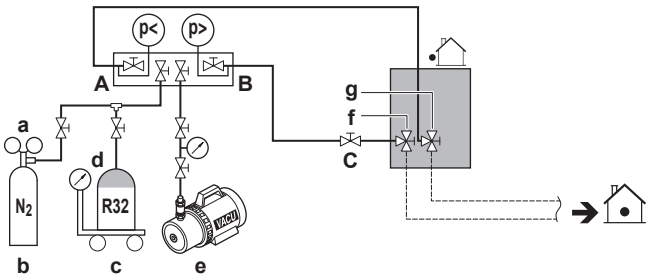

- **a** Pressure reducing valve
- **b** Nitrogen
- **c** Weighing scales
- **d** Refrigerant R32 tank (siphon system)
- **e** Vacuum pump
- **f** Liquid line stop valve
- **g** Gas line stop valve
- **A** Valve A
- **B** Valve B
- **C** Valve C

2 Open valves C and B.

3 Pre-charge refrigerant until the determined additional refrigerant amount is reached or pre-charging is not possible anymore, and then close valves C and B.

4 Do one of the following:

If	Then
The determined additional refrigerant amount is **reached**	Disconnect the manifold from the liquid line. You do not have to perform the "Charging refrigerant (in manual additional refrigerant charge mode)" instructions.

If	Then
Too much refrigerant is charged	Recover refrigerant. Disconnect the manifold from the liquid line. You do not have to perform the "Charging refrigerant (in manual additional refrigerant charge mode)" instructions.
The determined additional refrigerant amount is **not reached** yet	Disconnect the manifold from the liquid line. Continue with the "Charging refrigerant (in manual additional refrigerant charge mode)" instructions.

Charging refrigerant (in manual additional refrigerant charge mode)

The remaining additional refrigerant charge can be charged by operating the outdoor unit by means of the manual additional refrigerant charge mode.

5 Connect as shown. Make sure valve A is closed.

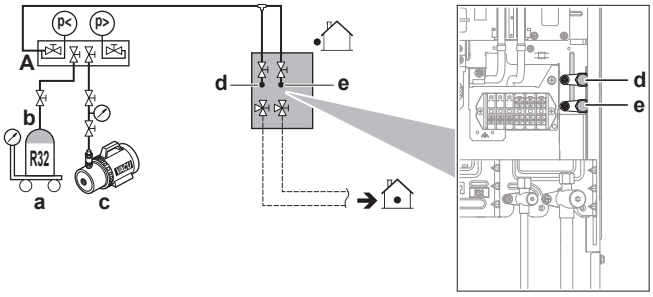

- **a** Weighing scales
- **b** Refrigerant R32 tank (siphon system)
- **c** Vacuum pump
- **d** Refrigerant charge port (heat exchanger)
- **e** Refrigerant charge port (suction)
- **A** Valve A

NOTICE

The refrigerant charging port is connected to the piping inside the unit. The unit's internal piping is already factory charged with refrigerant, so be careful when connecting the charge hose.

6 Open all outdoor unit stop valves. At this point, valve A must remain closed!

7 Take all the precautions mentioned in "18 Configuration" [▶ 35] and "19 Commissioning" [▶ 38] into account.

8 Turn on the power of the indoor unit(s) and outdoor unit.

9 Activate setting [2-20] to start the manual additional refrigerant charge mode. For details, see "18.1.8 Mode 2: field settings" [▶ 37].

Result: The unit will start operation.

INFORMATION

The manual refrigerant charge operation will automatically stop within 30 minutes. If charging is not completed after 30 minutes, perform the additional refrigerant charging operation again.

INFORMATION

- When a malfunction is detected during the procedure (e.g., in case of closed stop valve), a malfunction code will be displayed. In that case, refer to "15.4 Error codes when charging refrigerant" [▶ 30] and solve the malfunction accordingly. Resetting the malfunction can be done by pushing BS3. You can restart the "Charging" instructions.
- Aborting the manual refrigerant charge is possible by pushing BS3. The unit will stop and return to idle condition.

10 Open valve A.

11 Charge refrigerant until the remaining determined additional refrigerant amount is added, and then close valve A.

12 Press BS3 to stop the manual additional refrigerant charge mode.

NOTICE

Make sure to open all stop valves after (pre-) charging the refrigerant.

Operating with the stop valves closed will damage the compressor.

NOTICE

After adding the refrigerant, do not forget to close the lid of the refrigerant charging port. The tightening torque for the lid is 11.5 to 13.9 N•m.

15.4 Error codes when charging refrigerant

INFORMATION

If a malfunction occurs, the error code is displayed on the outdoor unit's 7-segments display and on the user interface of the indoor unit.

If a malfunction occurs, close valve A immediately. Confirm the malfunction code and take corresponding action, "20.1 Solving problems based on error codes" [▶ 40].

15.5 To fix the fluorinated greenhouse gases label

1 Fill in the label as follows:

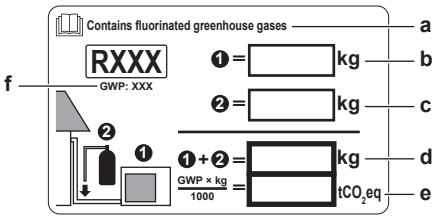

- **a** If a multilingual fluorinated greenhouse gases label is delivered with the unit (see accessories), peel off the applicable language and stick it on top of **a**.
- **b** Factory refrigerant charge: see unit name plate
- **c** Additional refrigerant amount charged
- **d** Total refrigerant charge
- **e** **Quantity of fluorinated greenhouse gases** of the total refrigerant charge expressed as tonnes CO_2 equivalent.
- **f** GWP = Global Warming Potential

NOTICE

Applicable legislation on **fluorinated greenhouse gases** requires that the refrigerant charge of the unit is indicated both in weight and CO_2 equivalent.

Formula to calculate the quantity in CO_2 equivalent tonnes: GWP value of the refrigerant × total refrigerant charge [in kg] / 1000

Use the GWP value mentioned on the refrigerant charge label.

2 Fix the label on the inside of the outdoor unit. There is a dedicated place for it on the wiring diagram label.

15.6 To check refrigerant piping joints for leaks after charging refrigerant

Tightness test of field-made refrigerant joints indoors

1 Use a leakage test method with a minimum sensitivity of 5 g of refrigerant/year. Test leaks using a pressure of at least 0.25 times the maximum working pressure (see "PS High" on the unit nameplate).

If a leak is detected

1 Recover the refrigerant, repair the joint, and repeat the test.

2 Perform the leak tests see "14.4.2 To perform a leak test" [▸ 28].

3 Charge refrigerant.

4 Check for refrigerant leaks after charging (see above).

16 Electrical installation

CAUTION

See "2 Specific installer safety instructions" [▸ 5] to make sure this installation complies with all safety regulations.

16.1 About electrical compliance

This equipment complies with:

- **EN/IEC 61000-3-12** provided that the short-circuit power S_{sc} is greater than or equal to the minimum S_{sc} value at the interface point between the user's supply and the public system.
  - EN/IEC 61000-3-12 = European/International Technical Standard setting the limits for harmonic currents produced by equipment connected to public low-voltage systems with input current >16 A and ≤75 A per phase.
  - It is the responsibility of the installer or user of the equipment to ensure, by consultation with the distribution network operator if necessary, that the equipment is connected ONLY to a supply with a short-circuit power S_{sc} greater than or equal to the minimum S_{sc} value.

Model	Minimum S_{sc} value
RXYSA4_V	122.95 kVA
RXYSA5_V	154.07 kVA
RXYSA6_V	173.05 kVA

16.2 Specifications of standard wiring components

NOTICE

We recommend using solid wires. If stranded wires are used, slightly twist the strands to consolidate the end of the conductor for either direct use in the terminal clamp or insertion in a round crimp-style terminal. Details are described in "Guidelines when connecting the electrical wiring" in the installer reference guide.

Component		RXYSA*_V	RXYSA*_Y
Power supply cable	MCA[(a)]	27.0 A	13.6 A
	Voltage	220-240 V	380-415 V
	Phase	1~	3N~
	Frequency	50 Hz	
	Wire size	MUST comply with national wiring regulation.	
		3-core cable	5-core cable
		Wire size based on the current, but not less than:	
		4.0 mm²	2.5 mm²
Interconnection cable (indoor ↔ outdoor)	Voltage	220-240 V	
	Wire size	Only use harmonised wire providing double insulation and suitable for applicable voltage. 2-core cable 0.75-1.5 mm²	
Recommended field fuse		32 A, C curve	16 A, C curve
Earth leakage circuit breaker / residual current device		In the power supply line, ALWAYS install a residual current device (RCD) with an instantaneous action. The installed RCD MUST comply with the national wiring regulation.	

[(a)] MCA=Minimum circuit ampacity. Stated values are maximum values (see electrical data of combination with indoor units for exact values).

16.3 To connect the electrical wiring to the outdoor unit

WARNING

Do NOT extend the power supply or the interconnection cable by using wire connectors, wire connection clamps, taped wires, extension cords.

These can cause overheating, electric shock or fire.

CAUTION

- When connecting the power supply: connect the earth cable first, before making the current-carrying connections.
- When disconnecting the power supply: disconnect the current-carrying cables first, before separating the earth connection.
- The length of the conductors between the power supply stress relief and the terminal block itself MUST be as such that the current-carrying wires are tautened before the earth wire is in case the power supply is pulled loose from the stress relief.

NOTICE

- Follow the wiring diagram (delivered with the unit, located at the inside of the service cover).
- Make sure the electrical wiring does NOT obstruct proper reattachment of the service cover.

1 Remove the service cover. See "13.2.1 To open the outdoor unit" [▶22].

2 Connect the interconnection cable as follows:

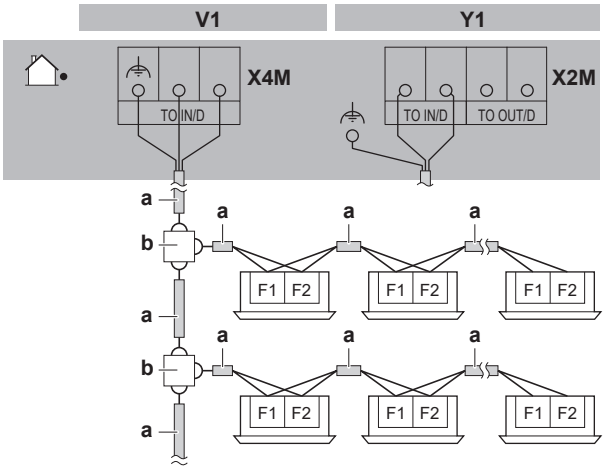

a Interconnection cable (see "16.2 Specifications of standard wiring components" [▶31] for wiring requirements)
b Terminal board (field supply)
c Shielded cable

NOTICE

- Use shielded wire for the interconnection cable.
- Y1 only: connect the earth (a) to the support frame of the terminal X2M.

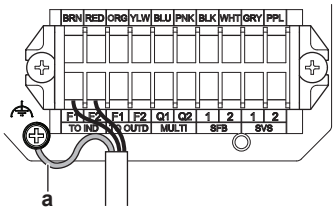

3 Connect the power supply as follows:

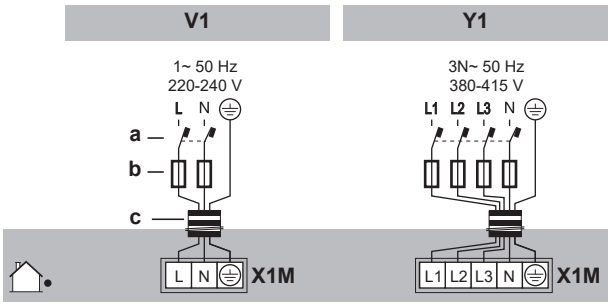

a Earth leakage circuit breaker
b Fuse
c Power supply cable (see "16.2 Specifications of standard wiring components" [▶31] for wiring requirements)

4 Fix the cables (power supply and interconnection cable) with a cable tie to the stop valve attachment plate and route the wiring according to the illustration below.

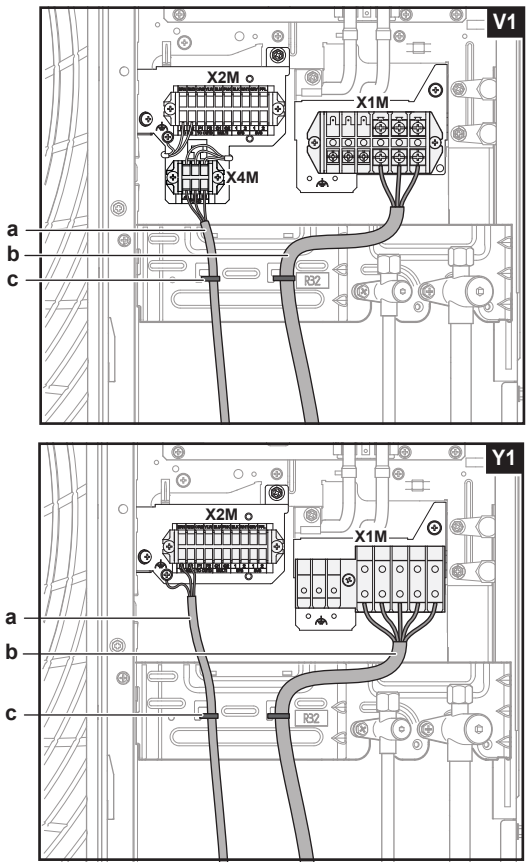

a Interconnection cable
b Power supply cable
c Cable tie (field supply, maximum recommended width 5 mm)

WARNING

Do NOT strip the outer cable jacket lower than the fixation point on the stop valve attachment plate.

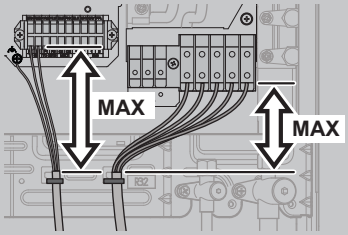

5 Choose one of the three possibilities to route the cables through the frame:

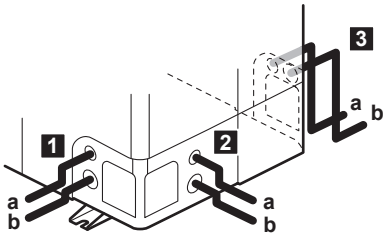

a Interconnection cable
b Power supply cable

6 Remove the selected knockout holes by tapping on the attachment points with a flat head screwdriver and a hammer.

7 Install a cable protection in the knockout hole:

- It is recommended to install a PG type cable gland in the knockout hole.
- When you do not use a cable gland, protect the cables with vinyl tubes to prevent the edge of the knockout hole from cutting the wires:

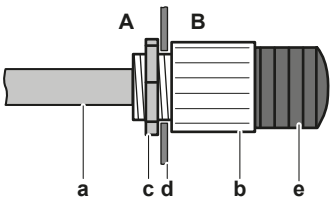

A Inside of the outdoor unit
B Outside of the outdoor unit
a Cable
b Bush
c Nut
d Frame
e Tube

8 Route the cables out of the unit.

WARNING

Avoid sharp edges when routing cables to the rear. Make sure to route the cables through the left side of the accumulator foot when passing through the tunnel:

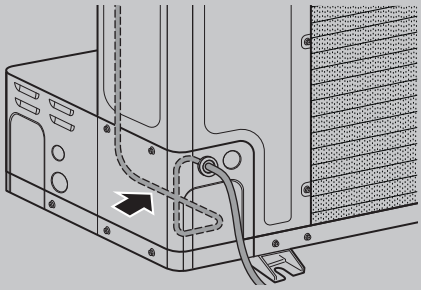

9 Reattach the service cover. See "13.2.2 To close the outdoor unit" [▸ 22].

10 Connect an earth leakage circuit breaker and fuse to the power supply line as specified in "16.2 Specifications of standard wiring components" [▸ 31].

16.4 To connect the external outputs

SVS output

The SVS output is a contact on terminal X2M that closes in case a leak is detected, failure or disconnection of the R32 sensor (located in the indoor unit).

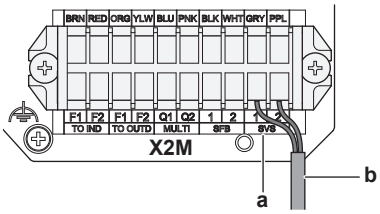

a SVS output terminals (1 and 2)
b Cable to SVS output device

SVS connection requirements		
Voltage	<40 VDC	
Maximum current	0.025 A	
Wire size	Only use harmonised wire providing double insulation and suitable for 220~240 V	
	2-core cable	
	Minimum cable section of 0.75 mm²	
Polarity	Terminal 1	+
	Terminal 2	–

It is mandatory to use a surge killer to protect the internal circuit of the outdoor unit PCB (e.g. a separate surge killer diode or a relay with a built-in surge killer diode).

Example:

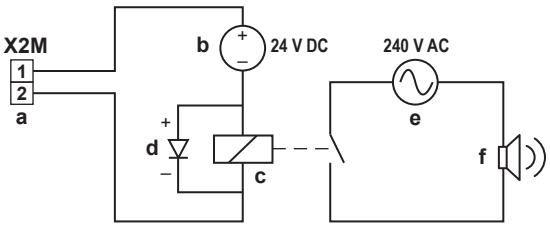

a SVS output terminal
b DC power supply
c Relay
d Surge killer diode
e AC power supply
f External alarm

SVEO output

The SVEO output is a contact on terminal X1M that closes in case of occurrence of general errors. See "8.1 Error codes: Overview" [▸ 13] and "20.1.1 Error codes: Overview" [▸ 40] for errors that will trigger this output.

SVEO connection requirements	
Voltage	220~240 V AC
Maximum current	0.5 A
Wire size	Only use harmonised wire providing double insulation and suitable for the applicable voltage
	2-core cable
	Minimum cable section of 0.75 mm²

For the SVEO connection it is recommended to use a shielded cable. The cable shield must be earthed at the marked earthing point that is located on the support frame of the terminal.

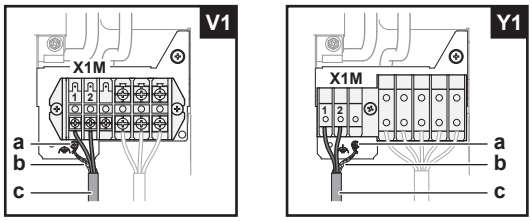

a Earthing point
b Cable shield
c Cable to SVEO output device

INFORMATION

Sound data about the refrigerant leakage alarm are available in the technical data sheet of the user interface. E.g. the BRC1H52* controller generates an alarm of 65 dB (sound pressure, measured at 1 m distance from the alarm).

16.5 To connect the cool/heat selector switch option

In order to control the cooling or heating operation from a central location, the following optional cool/heat selector switch (KRC19-26A) can be connected:

1 Remove the mounting screw from the terminal mounting plate.

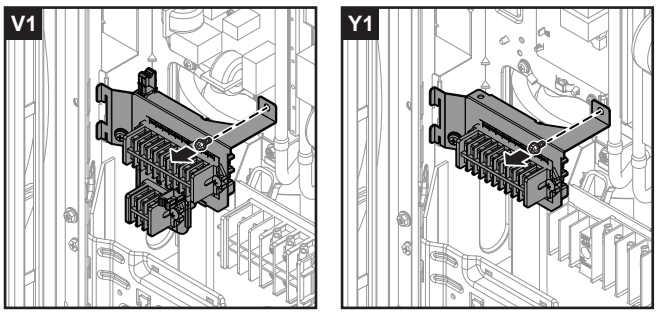

2 Turn the terminal mounting plate to reach the other side of the plate.

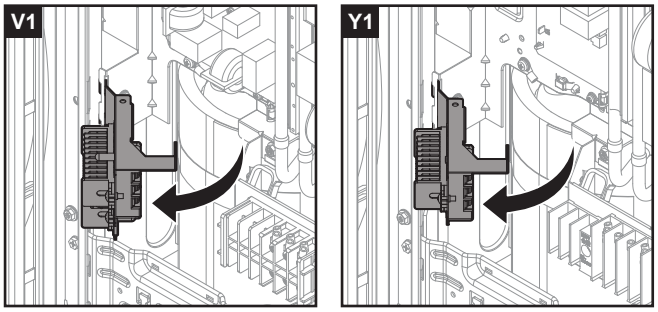

3 Connect the cool/heat selector switch to terminal X3M.

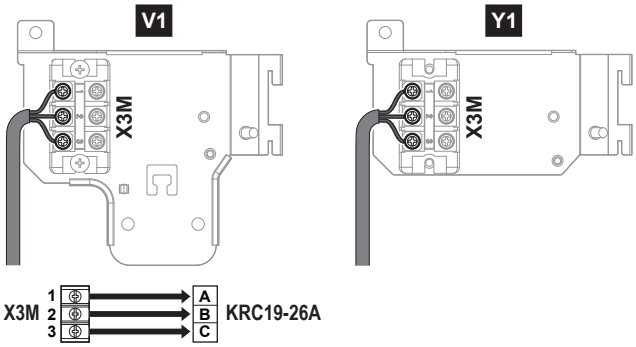

X3M	Terminal on the unit
KRC19-26A	Cool/heat selector switch

4 Turn back the terminal mounting plate and reinstall the screw.

5 Fix the cables with cable ties.

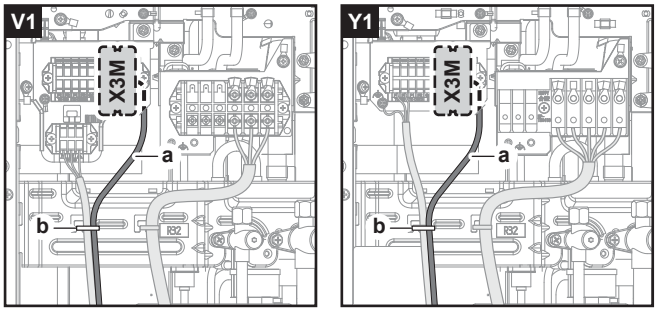

a	Cool/heat selector switch cable
b	Cable tie

6 Turn ON the DIP switch (DS1-1). See "18.1.3 Field setting components" [▶ 36] for more information on the DIP switch.

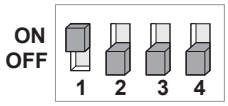

DS1	DIP switch 1

16.6 To check the insulation resistance of the compressor

NOTICE

If, after installation, refrigerant accumulates in the compressor, the insulation resistance over the poles can drop, but if it is at least 1 MΩ, then the unit will not break down.

- Use a 500 V mega-tester when measuring insulation.
- Do NOT use a mega-tester for low voltage circuits.

1 Measure the insulation resistance over the poles.

If	Then
≥1 MΩ	Insulation resistance is OK. This procedure is finished.
<1 MΩ	Insulation resistance is not OK. Go to the next step.

2 Turn ON the power and leave it on for 6 hours.

Result: The compressor will heat up and evaporate any refrigerant in the compressor.

3 Measure the insulation resistance again.

17 Finishing the outdoor unit installation

17.1 To insulate the refrigerant piping

After finishing the charging procedure, the piping must be insulated. Take into account the following points:

- Make sure to insulate the connection piping and refrigerant branch kits entirely.
- Be sure to insulate the liquid and gas piping (for all units).
- Use heat resistant polyethylene foam which can withstand a temperature of 70°C for liquid piping and polyethylene foam which can withstand a temperature of 120°C for gas piping.
- Reinforce the insulation on the refrigerant piping according to the installation environment.

Ambient temperature	Humidity	Minimum thickness
≤30°C	75% to 80% RH	15 mm
>30°C	≥80% RH	20 mm

Between outdoor and indoor unit

1 Insulate and fix the refrigerant piping and cables as follows:

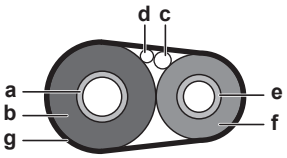

a	Gas pipe
b	Gas pipe insulation
c	Interconnection cable
d	Field wiring (if applicable)
e	Liquid pipe
f	Liquid pipe insulation
g	Finishing tape

2 Install the service cover.

Inside the outdoor unit

To insulate the refrigerant piping, proceed as follows:

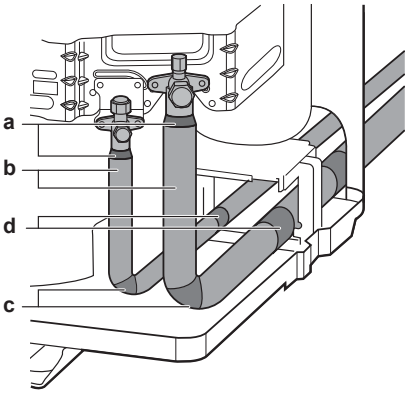

1 Insulate the liquid and gas piping.
2 Wind heat insulation around the curves, and then cover it with vinyl tape (c, see above).
3 Make sure the field piping does not touch any compressor components.
4 Seal the insulation ends (sealant etc.) (b, see above).
5 Wrap the field piping with vinyl tape (d, see above) to protect it against sharp edges
6 If the outdoor unit is installed above the indoor unit, cover the stop valves with sealing material to prevent condensed water on the stop valves from moving to the indoor unit.

NOTICE
Any exposed piping can cause condensation.

7 Reattach the service cover and the piping intake plate.
8 Seal all gaps to prevent snow and small animals from entering the system.

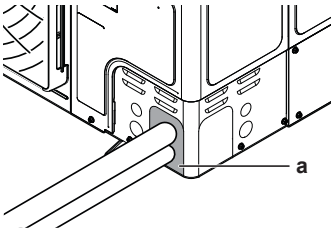

a Seal

NOTICE
Do not block the air vents. This could affect air circulation inside the unit.

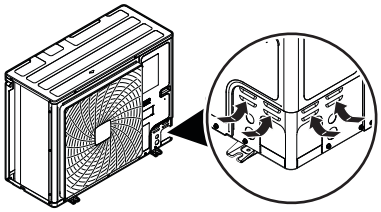

WARNING
Provide adequate measures to prevent that the unit can be used as a shelter by small animals. Small animals that make contact with electrical parts can cause malfunctions, smoke or fire.

18 Configuration

DANGER: RISK OF ELECTROCUTION

NOTICE
Make sure field setting [2-49] "New installation or replacement installation" is correctly set.

INFORMATION
It is important that all information in this chapter is read sequentially by the installer and that the system is configured as applicable.

18.1 Making field settings

18.1.1 About making field settings

To configure the heat pump system, you must give input to the outdoor unit's main PCB (A1P). This involves the following field setting components:

- Push buttons to give input to the PCB
- A display to read feedback from the PCB
- DIP switches (only change the factory settings if you install a cool/heat selector switch).

See also:

- "18.1.3 Field setting components" [▶ 36]
- "18.1.2 To access the field setting components" [▶ 36]

PC configurator

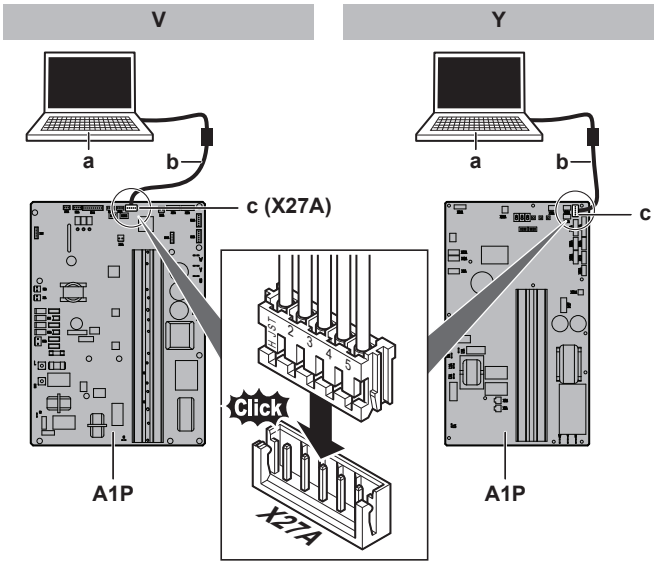

a PC
b Cable (EKPCCAB*)
c Extension cable connected to X27A
X27A Connector
A1P Outdoor unit main PCB

Mode 1 and 2

Mode	Description
Mode 1 (monitoring settings)	Mode 1 can be used to monitor the current situation of the outdoor unit. Some field setting contents can be monitored as well.

Mode	Description
Mode 2 (field settings)	Mode 2 is used to change the field settings of the system. Consulting the current field setting value and changing the current field setting value is possible. In general, normal operation can be resumed without special intervention after changing field settings. Some field settings are used for special operation (e.g., one time operation, recovery/vacuuming setting, manual adding refrigerant setting, etc.). In such a case, it is required to abort the special operation before normal operation can restart. It will be indicated in below explanations.

See also:

- "18.1.4 To access mode 1 or 2" [▶ 36]
- "18.1.5 To use mode 1" [▶ 37]
- "18.1.6 To use mode 2" [▶ 37]
- "18.1.7 Mode 1: monitoring settings" [▶ 37]
- "18.1.8 Mode 2: field settings" [▶ 37]

18.1.2 To access the field setting components

See "13.2.1 To open the outdoor unit" [▶ 22].

18.1.3 Field setting components

Location of the 7-segment displays, buttons and DIP switches:

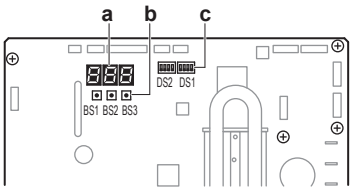

18–1 1 Phase (V)

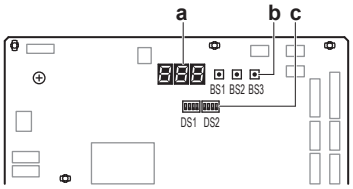

18–2 3 Phase (Y)

BS1	MODE: For changing the set mode
BS2	SET: For field setting
BS3	RETURN: For field setting
DS1, DS2	DIP switches
a	7-segment displays
b	Push buttons
c	DIP switches

DIP switches

Only change the factory settings if you install a cool/heat selector switch.

DS1-1	COOL/HEAT selector (refer to the manual of the cool/heat selector switch). ON= COOL/HEAT selector active; OFF=not installed=factory setting
DS1-2	NOT USED. DO NOT CHANGE THE FACTORY SETTING.

Push buttons

Use the push buttons to make the field settings. Operate the push buttons with an insulated stick (such as a closed ball-point pen) to avoid touching live parts.

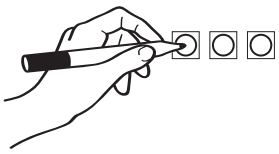

7-segment displays

The display gives feedback about the field settings, which are defined as [Mode-Setting]=Value.

Example

	Description
	Default situation
	Mode 1
	Mode 2
	Setting 8 (in mode 2)
	Value 4 (in mode 2)

18.1.4 To access mode 1 or 2

Initialisation: default situation

NOTICE

Turn ON the power 6 hours before operation in order to have power running to the crankcase heater and to protect the compressor.

Turn on the power supply of the outdoor unit and all indoor units. When the communication between indoor units and outdoor unit(s) is established and normal, the 7-segment display indication state will be as below (default situation when shipped from factory).

Stage	Display
When turning on the power supply: blinking as indicated. First checks on power supply are executed (8~10 min).	
When no trouble occurs: lighted as indicated (1~2 min).	
Ready for operation: blank display indication as indicated.	

Off
Blinking
On

In case of malfunction, the malfunction code is displayed on the indoor unit user interface and the outdoor unit 7-segment display. Solve the malfunction code accordingly. The communication wiring should be checked at first.

Access

BS1 is used to switch between the default situation, mode 1 and mode 2.

Access	Action
Default situation	

Access	Action
Mode 1	▪ Push BS1 one time. 7-segment display indication changes to: 1.00 ▪ Push BS1 one more time to return to the default situation.
Mode 2	▪ Push BS1 for at least five seconds. 7-segment display indication changes to: 2.00 ▪ Push BS1 one more time (short) to return to the default situation.

INFORMATION

If you get confused in the middle of the process, push BS1 to return to the default situation (no indication on 7-segment displays: blank, see "18.1.4 To access mode 1 or 2" [▶ 36].

18.1.5 To use mode 1

Mode 1 is used to set basic settings and to monitor the status of the unit.

What	How
Changing and accessing the setting in mode 1	1 Push BS1 one time to select mode 1. 2 Push BS2 to select the required setting. 3 Push BS3 one time to access the selected setting's value.
To quit and return to the initial status	Push BS1.

18.1.6 To use mode 2

Mode 2 is used to set field settings of the outdoor unit and system.

What	How
Changing and accessing the setting in mode 2	▪ Push BS1 for more than five seconds to select mode 2. ▪ Push BS2 to select the required setting. ▪ Push BS3 one time to access the selected setting's value.
To quit and return to the initial status	Push BS1.
Changing the value of the selected setting in mode 2	▪ Push BS1 for more than five seconds to select mode 2. ▪ Push BS2 to select the required setting. ▪ Push BS3 one time to access the selected setting's value. ▪ Push BS2 to select the required value of the selected setting. ▪ Push BS3 one time to validate the change. ▪ Push BS3 again to start operation with the chosen value.

18.1.7 Mode 1: monitoring settings

[1-1]

Shows the status of low noise operation.

[1-1]	Description
0	Unit is currently not operating under low noise restrictions.
1	Unit is currently operating under low noise restrictions.

[1-2]

Shows the status of power consumption limitation operation.

[1-2]	Description
0	Unit is currently not operating under power consumption limitations.
1	Unit is currently operating under power consumption limitation.

[1-5] [1-6]

Code	Shows ...
[1-5]	The current T_e target parameter position
[1-6]	The current T_c target parameter position

[1-10]

Shows the total number of connected indoor units.

[1-17] [1-18] [1-19]

Code	Shows ...
[1-17]	The latest malfunction code
[1-18]	The 2nd last malfunction code
[1-19]	The 3rd last malfunction code

[1-40] [1-41]

Code	Shows ...
[1-40]	The current cooling comfort setting
[1-41]	The current heating comfort setting

18.1.8 Mode 2: field settings

[2-8]

T_e target temperature during cooling operation.

[2-8]	T_e target [°C]
0 (default)	Auto
2	6
3	7
4	8
5	9
6	10
7	11

[2-9]

T_c target temperature during heating operation.

[2-9]	T_c target (°C)
0 (default)	Auto
1	41
3	43
6	46

[2-18]

Fan high static pressure setting.

If the static pressure of the outdoor unit fan increases, the airflow decreases and the fan motor power input increases. The unit can estimate the ESP via measurements.

Via this setting, the installer can set the ESP to a fixed level or change the moment of ESP evaluation.

Note: For an ESP level higher than 45 Pa, level 0 is kept for reliability of the fan motor.

[2-18]	Description
0 (default)	Auto setting at commissioning mode and stand-by mode
1	Auto setting at commissioning mode only
2	Level 0 (ESP between 0-20 Pa)
3	Level 1 (ESP between 20-35 Pa)
4	Level 2 (ESP between 35-45 Pa)

[2-20]

Manual additional refrigerant charge.

[2-20]	Description
0 (default)	Deactivated.
1	Activated. To stop the manual additional refrigerant charge operation (when the required additional refrigerant amount is charged), push BS3. If this function was not aborted by pushing BS3, the unit will stop its operation after 30 minutes. If 30 minutes was not sufficient to add the needed refrigerant amount, the function can be reactivated by changing the field setting again.

[2-49]

New installation or replacement installation. This field setting is important for correct oil management.

[2-49]	Description
0	New installation (new R32 piping)
1 (default)	Replacement (reuse of R410A piping)

[2-60]

Supervisor remote controller setting. A power reset is required to save this setting.

For details about the supervisor remote controller, see "12.2 System layout requirements" [▸ 16] or refer to the remote controller installation and user reference guide.

[2-60]	Description
0 (default)	No supervisor remote controller connected to the system
1	Supervisor remote controller connected to system

19 Commissioning

NOTICE

General commissioning checklist. Next to the commissioning instructions in this chapter, a general commissioning checklist is also available on the Daikin Business Portal (authentication required).

The general commissioning checklist is complementary to the instructions in this chapter and can be used as a guideline and reporting template during commissioning and hand-over to the user.

NOTICE

ALWAYS operate the unit with thermistors and/or pressure sensors/switches. If NOT, burning of the compressor might be the result.

19.1 Precautions when commissioning

CAUTION

Do NOT perform the test operation while working on the indoor unit(s).

When performing the test operation, NOT ONLY the outdoor unit, but the connected indoor unit will operate as well. Working on an indoor unit while performing a test operation is dangerous.

NOTICE

Turn ON the power 6 hours before operation in order to have power running to the crankcase heater and to protect the compressor.

During test operation, the outdoor unit and the indoor units will start up. Make sure that the preparations of all indoor units are finished (field piping, electrical wiring, air purge, ...). See installation manual of the indoor units for details.

19.2 Checklist before commissioning

1. After the installation of the unit, check the items listed below.
2. Close the unit.
3. Power up the unit.

☐	You have read the complete installation and operation instructions described in the **installer and user reference guide**.
☐	**Installation** Check that the unit is properly installed, to avoid abnormal noises and vibrations when starting up the unit.
☐	**Field wiring** Check that the field wiring has been carried out according to the instructions described in the chapter "16 Electrical installation" [▸ 31], according to the wiring diagrams and according to the applicable national wiring regulation.
☐	**Power supply voltage** Check the power supply voltage on the local supply panel. The voltage MUST correspond to the voltage on the nameplate of the unit.
☐	**Earth wiring** Be sure that the earth wires have been connected properly and that the earth terminals are tightened.
☐	**Insulation test of the main power circuit** Using a megatester for 500 V, check that the insulation resistance of 2 MΩ or more is attained by applying a voltage of 500 V DC between power terminals and earth. NEVER use the megatester for the interconnection wiring.
☐	**Fuses, circuit breakers, or protection devices** Check that the fuses, circuit breakers, or the locally installed protection devices are of the size and type specified in the chapter "16.2 Specifications of standard wiring components" [▸ 31]. Be sure that neither a fuse nor a protection device has been bypassed.
☐	**Internal wiring** Visually check the switch box and the inside of the unit for loose connections or damaged electrical components.
☐	**Pipe size and pipe insulation** Be sure that correct pipe sizes are installed and that the insulation work is properly executed.
☐	**Stop valves** Be sure that the stop valves are open on both liquid and gas side.

☐	**Damaged equipment** Check the inside of the unit for damaged components or squeezed pipes.
☐	**Refrigerant leak** Check the inside of the unit on refrigerant leakage. If there is a refrigerant leak, try to repair the leak. If the repair is unsuccessful, call your local dealer. Do not touch any refrigerant which has leaked out from refrigerant piping connections. This may result in frostbite.
☐	**Oil leak** Check the compressor for oil leakage. If there is an oil leak, try to repair the leak. If the repairing is unsuccessful, call your local dealer.
☐	**Air inlet/outlet** Check that the air inlet and outlet of the unit is NOT obstructed by paper sheets, cardboard, or any other material.
☐	**Additional refrigerant charge** The amount of refrigerant to be added to the unit shall be written on the included "Added refrigerant" plate and attached to the rear side of the front cover.
☐	**Requirements for R32 equipment** Make sure the system meets all requirements that are described in the following chapter: "2.1 Instructions for equipment using R32 refrigerant" [▸ 6].

☐	**Field settings** Make sure all field settings you want are set. See "18.1 Making field settings" [▸ 35]. For correct oil management, make sure field setting [2-49] "New installation or replacement installation" is correctly set.
☐	**Installation date and field setting** Be sure to keep a record of the installation date on the sticker on the rear of the front panel according to EN60335-2-40 and keep record of the contents of the field setting(s).

19.3 Checklist during commissioning

☐	To perform a **test run**.

19.4 About the system test run

NOTICE

Make sure to carry out the test run after the first installation. Otherwise, the malfunction code U3 will be displayed on the user interface and normal operation or individual indoor unit test run cannot be carried out.

The procedure below describes the test operation of the complete system. This operation checks and judges following items:

- Check for incorrect wiring (communication check with indoor unit(s)).
- Check of the stop valves opening.
- Judgement of piping length.
- Abnormalities on indoor units cannot be checked for each unit separately. After the test operation is finished, check the indoor units one by one by performing a normal operation using the user interface. Refer to the indoor unit installation manual for more details concerning the individual test run.

INFORMATION

- It may take 10 minutes to achieve a uniform refrigerant state before the compressor starts.
- During the test operation, the refrigerant running sound or the magnetic sound of a solenoid valve may become loud and the display indication may change. These are not malfunctions.

19.5 To perform a test run (7-segment display)

1 Make sure all field settings you want are set; see "18.1 Making field settings" [▸ 35].

2 Turn ON the power to the outdoor unit and the connected indoor unit(s).

NOTICE

Turn ON the power 6 hours before operation in order to have power running to the crankcase heater and to protect the compressor.

3 Make sure the default (idle) situation is existing; see "18.1.4 To access mode 1 or 2" [▸ 36]. Push BS2 for 5 seconds or more. The unit will start test operation.

Result: The test operation is automatically carried out, the outdoor unit display will indicate "t01" and the indication "Test operation" and "Under centralised control" will display on the user interface of indoor units.

Steps during the automatic system test run procedure:

Step	Description
t01	Control before start up (pressure equalisation)
t02	Cooling start up control
t03	Cooling stable condition
t04	Communication check
t05	Stop valve check
t06	Pipe length check
t09	Pump down operation
t10	Unit stop

INFORMATION

During the test operation, it is not possible to stop the unit operation from a user interface. To abort the operation, press BS3. The unit will stop after ±30 seconds.

4 Check the test operation results on the outdoor unit 7-segment display.

Completion	Description
Normal completion	No indication on the 7-segment display (idle).
Abnormal completion	Indication of malfunction code on the 7-segment display. Refer to "19.6 Correcting after abnormal completion of the test run" [▸ 39] to take actions for correcting the abnormality. When the test operation is fully completed, normal operation will be possible after 5 minutes.

19.6 Correcting after abnormal completion of the test run

The test operation is only completed if there is no malfunction code displayed on the user interface or outdoor unit 7-segment display. In case of a displayed malfunction code, perform correcting actions as explained in the malfunction code table. Carry out the test operation again and confirm that the abnormality is properly corrected.

INFORMATION

Refer to the installation manual of the indoor unit for detailed malfunction codes related to indoor units.

20 Troubleshooting

20.1 Solving problems based on error codes

In case of a displayed malfunction code, perform correcting actions as explained in the malfunction code table.

After correcting the abnormality, press BS3 to reset the malfunction code and retry operation.

INFORMATION

If a malfunction occurs, the error code is displayed on the outdoor unit's 7-segments display and on the user interface of the indoor unit.

20.1.1 Error codes: Overview

In case other error codes appear, contact your dealer.

Main code	Cause	Solution	SVEO[a]	SVS[b]
A0-11	The R32 sensor in one of the indoor units has detected a refrigerant leak[c]	Possible R32 leak. The system will automatically start refrigerant recovery operation to store all refrigerant into the outdoor unit. When refrigerant recovery operation is finished, the system unit goes in locked status. Service is needed to repair the leak and activate the system. Refer to the service manual for more information.	✓	✓
A0/CH	Safety system error (leak detection)[c]	An error related to the safety system occurred. Refer to the service manual for more information.	✓	
CH-01	R32 sensor malfunction in one of the indoor units[c]	Check connection on PCB or actuator. The system will continue operation, but indoor unit in scope will stop operating. Refer to the service manual for more information.		✓
CH-02	R32 sensor end of lifetime in one of the indoor units[c]	One of the sensors is at the end of lifetime and must be replaced. Refer to the service manual for more information.		
CH-05	R32 sensor 6 months before end of lifetime in one of the indoor units[c]	One of the R32 sensors is close to the end of lifetime and will have to be replaced soon.		
CH-10	Waiting for R32 sensor replacement confirmation from one of the indoor units[c]	Waiting for confirmation that the R32 sensor has been replaced in one of the indoor units. Refer to the service manual for more information.		
E3	▪ The stop valve of an outdoor unit is left closed. ▪ Refrigerant overcharge	▪ Open the stop valve on both the gas and liquid side. ▪ Recalculate the required amount of refrigerant from the piping length and correct the refrigerant charge level by recovering any excessive refrigerant with a refrigerant recovery machine.	✓	
E4	▪ The stop valve of an outdoor unit is left closed. ▪ Insufficient refrigerant	▪ Open the stop valve on both the gas and liquid side. ▪ Check if the additional refrigerant charge has been finished correctly. Recalculate the required amount of refrigerant from the piping length and add an adequate amount of refrigerant.	✓	
E9	Electronic expansion valve malfunction (Y1E) - A1P (X21A) / (Y3E) - A1P (X23A)	Check connection on PCB or actuator.	✓	
F3	▪ The stop valve of an outdoor unit is left closed. ▪ Insufficient refrigerant	▪ Open the stop valve on both the gas and liquid side. ▪ Check if the additional refrigerant charge has been finished correctly. Recalculate the required amount of refrigerant from the piping length and add an adequate amount of refrigerant.	✓	
F6	Refrigerant overcharge	Recalculate the required amount of refrigerant from the piping length and correct the refrigerant charge level by recovering any excessive refrigerant with a refrigerant recovery machine.	✓	
H9	Ambient temperature sensor malfunction (R1T) - A1P (X18A)	Check connection on PCB or actuator.	✓	
J3	Discharge temperature sensor malfunction (R21T): open circuit / short circuit - A1P (X19A)	Check connection on PCB or actuator.	✓	

Main code	Cause	Solution	SVEO[(a)]	SVS[(b)]
J5	Suction temperature sensor malfunction (R3T) - A1P (X30A) (suction) / (R5T) - A1P (X30A) (sub-cool)	Check connection on PCB or actuator.	✓	
J6	Liquid temperature sensor (coil) malfunction (R4T) - A1P (X30A)	Check connection on PCB or actuator.	✓	
J7	Liquid temperature sensor (after subcool HE) malfunction (R7T) - A1P (X30A)	Check connection on PCB or actuator.	✓	
J9	Gas temperature sensor (after subcool HE) malfunction (R6T) - A1P (X30A) (superheat)	Check connection on PCB or actuator.	✓	
JA	High pressure sensor malfunction (S1NPH): open circuit / short circuit - A1P (X32A)	Check connection on PCB or actuator.	✓	
JC	Low pressure sensor malfunction (S1NPL): open circuit / short circuit - A1P (X31A)	Check connection on PCB or actuator.	✓	
LC	Transmission outdoor unit - inverter: INV1 / FAN1 transmission trouble	Check connection.	✓	
P1	INV1 unbalanced power supply voltage	Check if power supply is within range.		
U2	Insufficient supply voltage	Check if the supply voltage is supplied properly.	✓	
U3	Malfunction code: System test run not yet executed (system operation not possible)	Execute system test run.		
U4	No power is supplied to the outdoor unit.	Check if the power wiring for the outdoor unit is connected correctly.	✓	
U9	▪ System mismatch. Wrong type of indoor units combined (R410A, R407C, RA, etc) ▪ Indoor unit malfunction	Check if other indoor units have malfunction and confirm indoor unit mix is allowed.	✓	
UA	Improper type of indoor units are connected.	Check the type of indoor units that are currently connected. If they are not proper, replace them with proper ones.	✓	
UH	Incorrect interconnections between units.	Connect interconnections F1 and F2 of the connected BP unit correctly to the outdoor unit's PCB (TO BP UNIT). Make sure that the communication with the BP unit is enabled.	✓	
UF	▪ The stop valve of an outdoor unit is left closed. ▪ The piping and wiring of the specified indoor unit are not connected correctly to the outdoor unit.	▪ Open the stop valve on both the gas and liquid side. ▪ Confirm that the piping and wiring of the specified indoor unit are connected correctly to the outdoor unit.	✓	

(a) The SVEO terminal provides an electrical contact that closes in case the indicated error occurs.
(b) The SVS terminal provides an electrical contact that closes in case the indicated error occurs.
(c) The error code is only shown on the user interface of the indoor unit where the error occurs.

20.2 Refrigerant leak detection system

Normal operation

During normal operation, the alarm only and supervisor remote controller have no functionality. The screen of the remote controller in alarm only and supervisor mode will be off. Operation of the remote controller can be checked by pushing the button to open the installer menu.

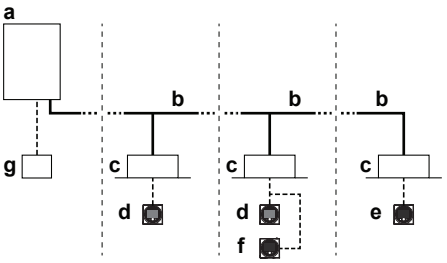

- **a** Heat pump outdoor unit
- **b** Refrigerant piping
- **c** VRV direct expansion (DX) indoor unit
- **d** Remote controller in normal mode
- **e** Remote controller in alarm only mode
- **f** Remote controller in supervisor mode (mandatory in some situations)
- **g** Centralised controller (optional)

Note: During start-up of the system, the mode of the remote control can be verified from the screen.

Leak detection operation

If the R32 sensor in the indoor unit detects a refrigerant leak, the user will be warned by both audible and visible signals of the remote controller of the leaking indoor unit (and the supervisor remote controller, if applicable). At the same time the outdoor unit will start refrigerant recovery operation in order to reduce the amount of refrigerant in the indoor system.

After refrigerant recovery operation, an error code is displayed and the unit is in locked state. Feedback of the remote controller after leak detection operation will depend on its mode.

Service is needed to repair the leak and activate the system. Refer to the service manual for more information.

WARNING

The unit is equipped with a refrigerant leak detection system for safety.

To be effective, the unit MUST be electrically powered at all times after installation, except for maintenance.

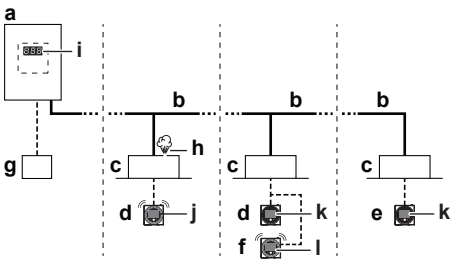

- **a** Heat pump outdoor unit
- **b** Refrigerant piping
- **c** VRV direct expansion (DX) indoor unit
- **d** Remote controller in normal mode
- **e** Remote controller in alarm only mode
- **f** Remote controller in supervisor mode (mandatory in some situations)
- **g** Centralised controller (optional)
- **h** Refrigerant leak
- **i** Outdoor unit error code on 7-segment display
- **j** Error code 'A0–11' and audible alarm and red warning signal is generated from this remote controller.
- **k** Error code 'U9–02' is displayed on this remote controller. No alarm or warning lights.
- **l** Error code 'A0–11' and audible alarm and red warning signal is generated from this **supervisor** remote controller. The unit **address** is displayed on this remote controller.

Note: It is possible to stop the leak detection alarm from the remote controller and from the app. To stop the alarm from the remote controller, press ⊞ for 3 seconds.

Note: Leak detection will trigger SVS output. For more information, see "16.4 To connect the external outputs" [▸ 33].

Note: An optional output PCB for the indoor unit can be added to provide output for external device. The output PCB will trigger in case a leak is detected. For exact model name see option list of the indoor unit. For more information about this option, refer to the installation manual of the optional output PCB

Note: Some centralised controllers can also be used as supervisor remote controller. For further details on installation, please refer to the installation manual of the centralised controllers.

NOTICE

The R32 refrigerant leakage sensor is a semiconductor detector which may incorrectly detect substances other than R32 refrigerant. Avoid using chemical substances (e.g. organic solvents, hair spray, paint) in high concentrations, in the close proximity of the indoor unit because this may cause misdetection by the R32 refrigerant leakage sensor.

21 Disposal

NOTICE

Do NOT try to dismantle the system yourself: dismantling of the system, treatment of the refrigerant, oil and other parts MUST comply with applicable legislation. Units MUST be treated at a specialised treatment facility for reuse, recycling and recovery.

22 Technical data

A **subset** of the latest technical data is available on the regional Daikin website (publicly accessible). The **full set** of the latest technical data is available on the Daikin Business Portal (authentication required).

22.1 Service space: Outdoor unit

Suction side	In the illustrations on the inside of the front cover of this manual, the service space at the suction side is based on 35°C DB and cooling operation. Foresee more space in the following cases: ▪ When the suction side temperature regularly exceeds this temperature. ▪ When the heat load of the outdoor units is expected to regularly exceed the maximum operating capacity.
Discharge side	Take refrigerant piping work into account when positioning the units. If your layout does not match with any of the layouts below, contact your dealer.

Single unit (▭) | Single row of units (⟷)

→ See "figure 1" [▸ 2] on the inside of the front cover of this manual.

(1) For better serviceability, use a side by side distance ≥250 mm.

- **A,B,C,D** Obstacles (walls/baffle plates)
- **E** Obstacle (roof)
- **a,b,c,d,e** Minimum service space between the unit and obstacles A, B, C, D and E
- **e_B** Maximum distance between the unit and the edge of obstacle E, in the direction of obstacle B
- **e_D** Maximum distance between the unit and the edge of obstacle E, in the direction of obstacle D
- **H_U** Height of the unit
- **H_B,H_D** Height of obstacles B and D
- **1** Seal the bottom of the installation frame to prevent discharged air from flowing back to the suction side through the bottom of the unit.
- **2** Maximum two units can be installed.
- ⊘ Not allowed

Multiple rows of units (⟷)

→ See "figure 2" [▸ 2] on the inside of the front cover of this manual.

(1) For better serviceability, use a side by side distance ≥250 mm.

Stacked units (max. 2 levels) (↕)

→ See "figure 3" [▸ 2] on the inside of the front cover of this manual.

(1) For better serviceability, use a side by side distance ≥250 mm.

- **A1=>A2** (A1) If there is danger of drainage dripping and freezing between the upper and lower units…
  (A2) Then install a **roof** between the upper and lower units. Install the upper unit high enough above the lower unit to prevent ice buildup at the upper unit's bottom plate.
- **B1=>B2** (B1) If there is no danger of drainage dripping and freezing between the upper and lower units…
  (B2) Then it is not required to install a roof, but **seal the gap** between the upper and lower units to prevent discharged air from flowing back to the suction side through the bottom of the unit.

22.2 Piping diagram: Outdoor unit

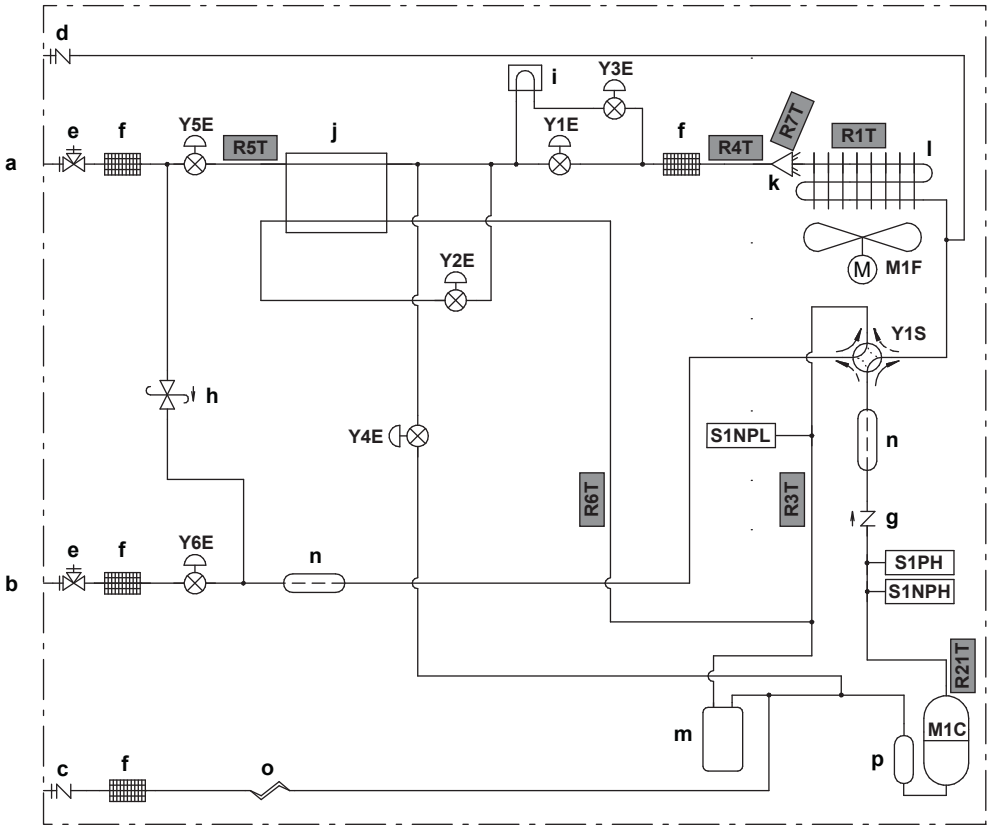

a	Liquid
b	Gas
c	Charge port
d	Service port
e	Stop valve
f	Refrigerant filter
g	One-way valve
h	Pressure relief valve
i	PCB cooling
j	Double tube heat exchanger
k	Distributor
l	Heat exchanger
m	Accumulator
n	Muffler
o	Capillary tube
p	Compressor accumulator
M1C	Compressor
M1F	Fan motor
S1PH	High pressure switch
S1NPL	Low pressure sensor
S1NPH	High pressure sensor
Y1E	Electronic expansion valve (main – EVM1)
Y2E	Electronic expansion valve (EVT)
Y3E	Electronic expansion valve (main – EVM2)
Y4E	Electronic expansion valve (EVL)
Y5E	Electronic expansion valve (EVSL)
Y6E	Electronic expansion valve (EVSG)
Y1S	4-way valve

Thermistors:

R1T	Thermistor (ambient)
R3T	Thermistor (suction)
R4T	Thermistor (liquid)
R5T	Thermistor (subcool)
R6T	Thermistor (superheat)
R7T	Thermistor (heat exchanger)
R10T	Thermistor (fin)
R21T	Thermistor (discharge)

Refrigerant flow:

→	Cooling
--→	Heating

22.3 Wiring diagram: Outdoor unit

The wiring diagram is delivered with the unit, located at the inside of the service cover.

Symbols:

X1M	Main terminal
—·—·—	Earth wiring
15	Wire number 15
- - - - - -	Field wire
	Field cable
①	Several wiring possibilities
	Option
	Not mounted in switch box
	Wiring depending on model
	PCB

Legend for wiring diagram (single phase models V1):

A1P	Printed circuit board (main)
A2P	Printed circuit board (sub)

A4P	Printed circuit board (cool/heat selector)
BS* (A1P)	Push buttons (mode, set, return, test, reset)
DS* (A1P)	DIP switch
E1H	Bottom plate heater (option)
E1HC	Crank case heater
F1U (A1P)	Fuse (M 56 A / 250 V)
F1U (A2P)	Fuse (T 3.15 A / 250 V)
F1U	Fuse (T 1.0 A / 250 V)
F2U (A1P)	Fuse (T 6.3 A / 250 V)
F3U (A1P)	Fuse (T 6.3 A / 250 V)
F6U (A1P)	Fuse (T 5.0 A / 250 V)
HAP (A1P)	Running LED (service monitor green)
K*M (A1P)	Contactor on PCB
K*R (A*P)	Relay on PCB
M1C	Motor (compressor)
M1F	Motor (fan)
PS (A*P)	Switching power supply
Q1	Overload switch
Q1DI	Earth leakage circuit breaker (field supply)
R1T	Thermistor (ambient)
R3T	Thermistor (suction)
R4T	Thermistor (liquid)
R5T	Thermistor (subcool)
R6T	Thermistor (superheat)
R7T	Thermistor (heat exchanger)
R10T	Thermistor (fin)
R21T	Thermistor (discharge)
R*T	PTC thermistor
S1NPH	High pressure sensor
S1NPL	Low pressure sensor
S1PH	High pressure switch
S1S	Air control switch (option)
S2S	Cool/heat selector switch (option)
SEG* (A1P)	7-segment display
SFB	Mechanical ventilation error input (field supply)
V1R, V2R (A1P)	IGBT power module
V3R (A1P)	Diode module
X*A	PCB connector
X*M	Terminal strip
X*Y	Connector
Y1E	Electronic expansion valve (main – EVM1)
Y2E	Electronic expansion valve (EVT)
Y3E	Electronic expansion valve (main – EVM2)
Y4E	Electronic expansion valve (EVL)
Y5E	Electronic expansion valve (EVSL)
Y6E	Electronic expansion valve (EVSG)
Y1S	Solenoid valve (4-way valve)
Y3S	Error operation output (SVEO) (field supply)
Y4S	Leak sensor output (SVS) (field supply)
Z*C	Noise filter (ferrite core)
Z*F (A*P)	Noise filter

Legend for wiring diagram (three phase models Y1):

A1P	Printed circuit board (main)
A2P	Printed circuit board (sub)
A4P	Printed circuit board (cool/heat selector)
A5P	Printed circuit board (noise filter)
BS* (A1P)	Push buttons (mode, set, return, test, reset)
C* (A1P)	Capacitors
DS* (A1P)	DIP switch
E1H	Bottom plate heater (option)
E1HC	Crank case heater
F1U (A1P)	Fuse (T 6.3 A / 250 V)
F1U (A2P)	Fuse (T 3.15 A / 250 V)
F1U	Fuse (T 1.0 A / 250 V)
F6U (A1P)	Fuse (T 6.3 A / 250 V)
F7U (A1P)	Fuse (T 5.0 A / 250 V)
HAP (A1P)	Running LED (service monitor green)
K*M (A1P)	Contactor on PCB
K*R (A*P)	Relay on PCB
L1R (A*P)	Reactor
M1C	Motor (compressor)
M1F	Motor (fan)
PS (A*P)	Switching power supply
Q1	Overload switch
Q1DI	Earth leakage circuit breaker (field supply)
R* (A*P)	Resistor
R1T	Thermistor (ambient)
R3T	Thermistor (suction)
R4T	Thermistor (liquid)
R5T	Thermistor (subcool)
R6T	Thermistor (superheat)
R7T	Thermistor (heat exchanger)
R10T	Thermistor (fin)
R21T	Thermistor (discharge)
R*T	PTC thermistor
S1NPH	High pressure sensor
S1NPL	Low pressure sensor
S1PH	High pressure switch
S1S	Air control switch (option)
S2S	Cool/heat selector switch (option)
SEG* (A1P)	7-segment display
SFB	Mechanical ventilation error input (field supply)
V*D	Diode module
V1R, V2R (A1P)	IGBT power module
V3R (A1P)	Diode module
X*A	PCB connector
X*M	Terminal strip
X*Y	Connector
Y1E	Electronic expansion valve (main – EVM1)
Y2E	Electronic expansion valve (EVT)
Y3E	Electronic expansion valve (main – EVM2)
Y4E	Electronic expansion valve (EVL)
Y5E	Electronic expansion valve (EVSL)
Y6E	Electronic expansion valve (EVSG)
Y1S	Solenoid valve (4-way valve)
Y3S	Error operation output (SVEO) (field supply)

Y4S	Leak sensor output (SVS) (field supply)
Z*C	Noise filter (ferrite core)
Z*F (A*P)	Noise filter

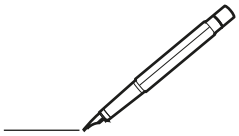

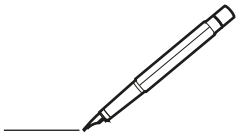

4P848371-1 0000000T

Copyright 2026 Daikin

DAIKIN EUROPE N.V.
Zandvoordestraat 300, B-8400 Oostende, Belgium

4P848371-1 2026.03